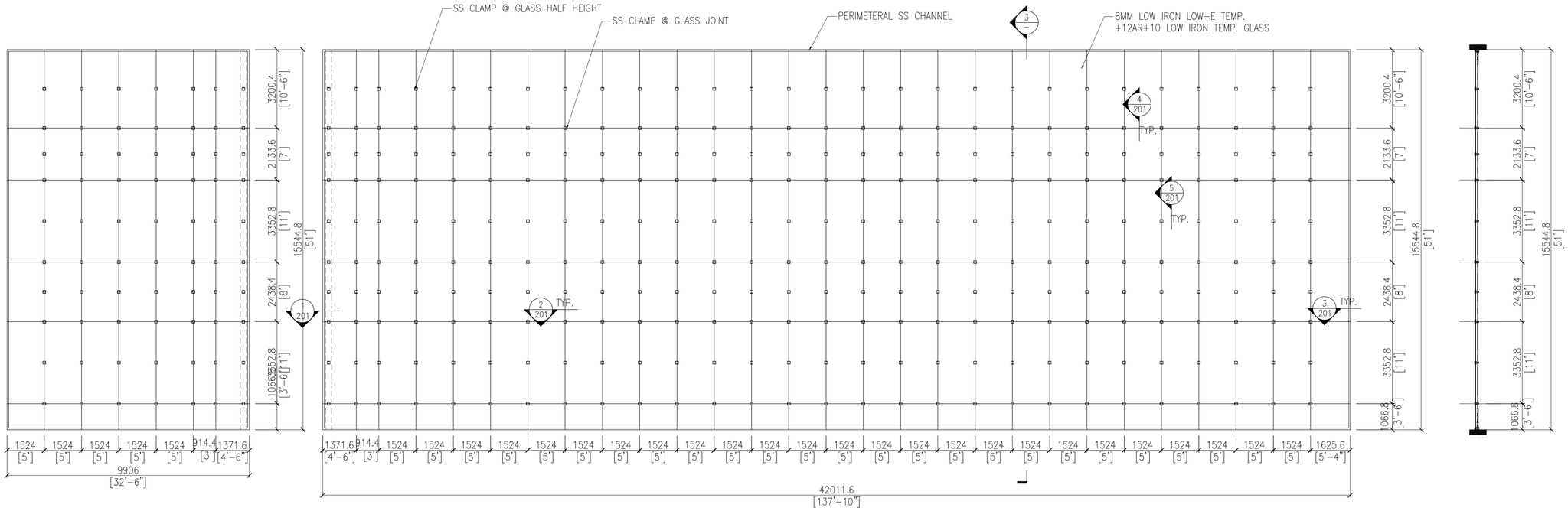

2 CABLE WALL ELEVATION(PROPOSAL 1)
SCALE: 1/8"=1'-0"

3 CABLE WALL SECTION(PROPOSAL 1)
SCALE: 1/8"=1'-0"

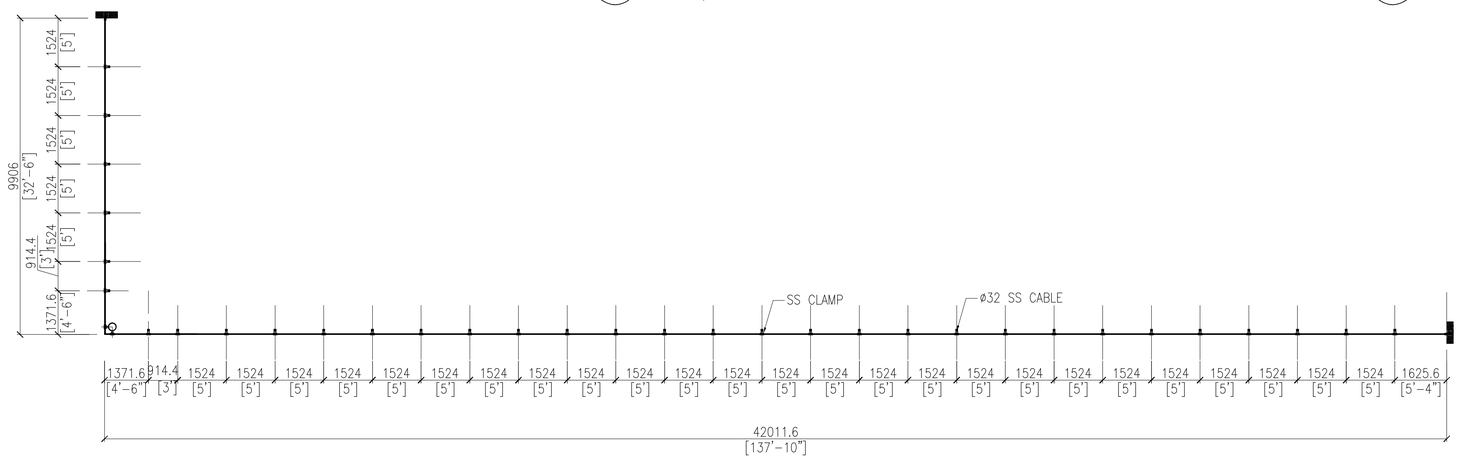

1 CABLE WALL PLAN(PROPOSAL 1)
SCALE: 1/8"=1'-0"

PROPOSAL 1
ONLY VERTICAL ø32 CABLE
CONNER COLUMN TO BE ADDED

REV.	DESCRIPTION OR PURPOSE OF AMENDMENT	MM/DD/YY	EDIT
A	-	-	-

NAVIGATION

CUSTOMER

ARCHITECT

STRUCTURAL ENGINEER

MAIN CONTRACTOR

CURTAINWALL DESIGN

PARAGON

PROJECT TITLE

DRAWING TITLE
CABLE WALL
ELEVATION PLAN & SECTION
PROPOSAL 1

SCALE	SIZE	REV.
1/8"=1'-0"	A1	A

DRAWING STATUS
PROPOSAL

DESIGNED BY	DATE
KEAN	11/08/2010

CHECKED BY	APPROVED BY
OWEN	OWEN

DRAWING NO.
P000-101

E:\TENDER\20101107 PARKLAND HOSPITAL CABLE WALL\PROPOSAL\P000_PARKLAND_PROPOSAL_R1_20101107.dwg

PDF created with FinePrint pdfFactory trial version www.pdffactory.com

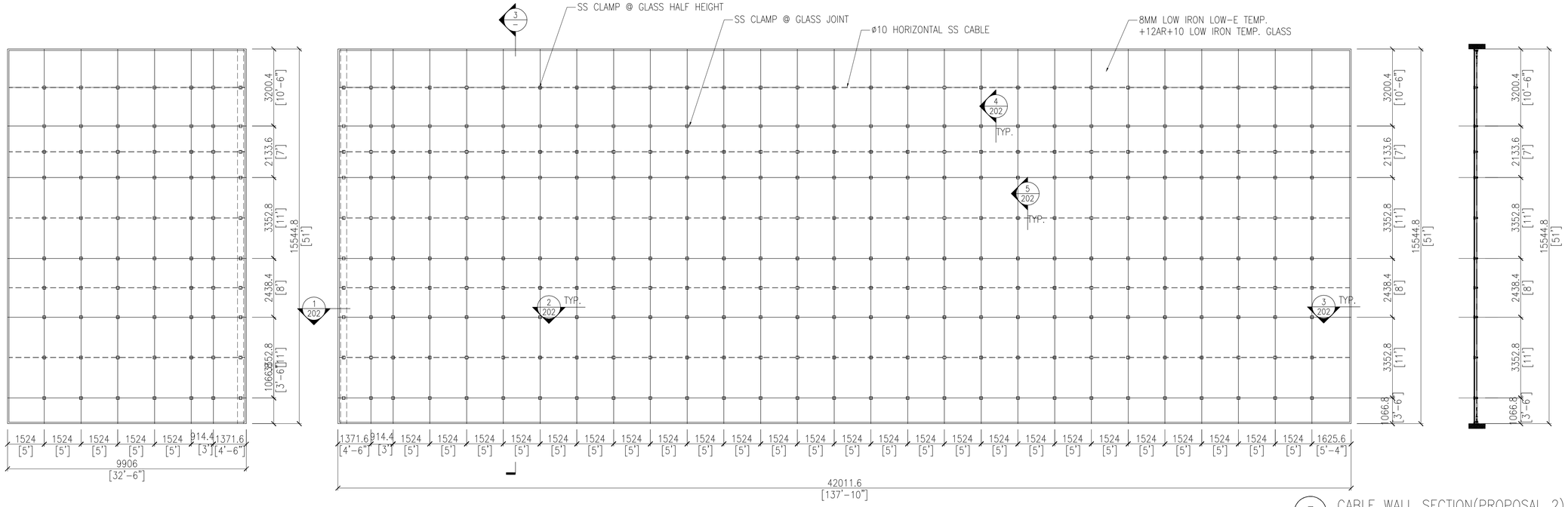

2 CABLE WALL ELEVATION(PROPOSAL 2)
SCALE: 1/8"=1'-0"

3 CABLE WALL SECTION(PROPOSAL 2)
SCALE: 1/8"=1'-0"

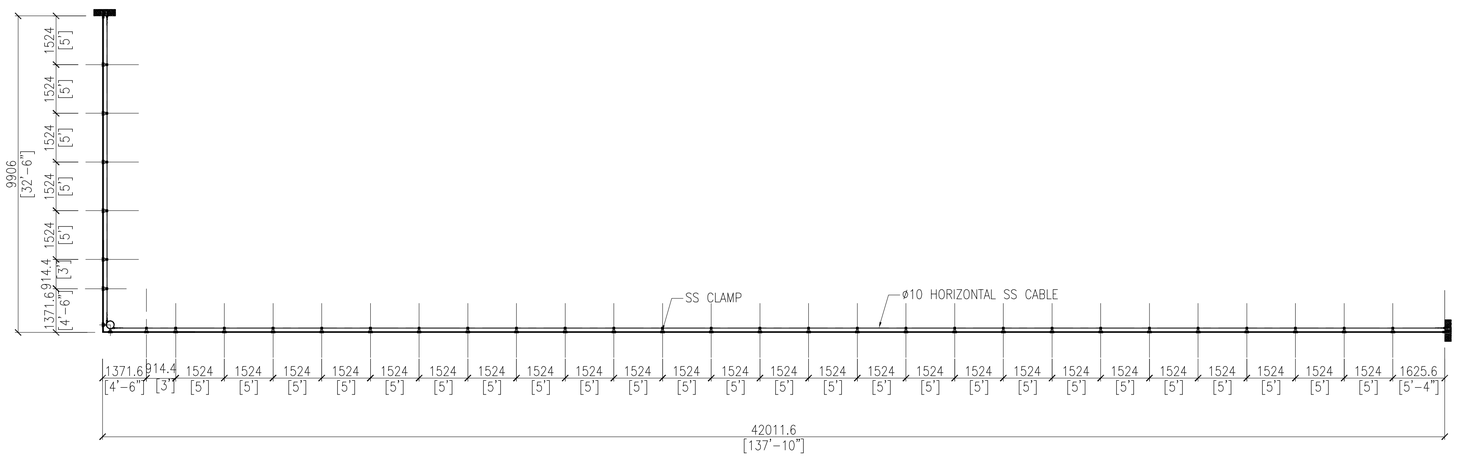

1 CABLE WALL PLAN(PROPOSAL 2)
SCALE: 1/8"=1'-0"

PROPOSAL 2
ONLY VERTICAL ø30 CABLE
HORIZONTAL ø 10 CABLE
CONNER COLUMN TO BE ADDED

REV.	DESCRIPTION OR PURPOSE OF AMENDMENT	MM/DD/YY	EDIT
A	-	-	-

NAVIGATION

CUSTOMER

ARCHITECT

STRUCTURAL ENGINEER

MAIN CONTRACTOR

CURTAINWALL DESIGN

PARAGON

PROJECT TITLE

DRAWING TITLE
CABLE WALL
ELEVATION PLAN & SECTION
PROPOSAL 2

SCALE	SIZE	REV.
1/8"=1'-0"	A1	A

DRAWING STATUS
PROPOSAL

DESIGNED BY	DATE
KEAN	11/08/2010
CHECKED BY	APPROVED BY
OWEN	OWEN

DRAWING NO.
P000-102

E:\TENDER\20101107 PARKLAND HOSPITAL CABLE WALL\PROPOSAL\P000_PARKLAND_PROPOSAL_R1_20101107.dwg

PDF created with FinePrint pdfFactory trial version www.pdffactory.com

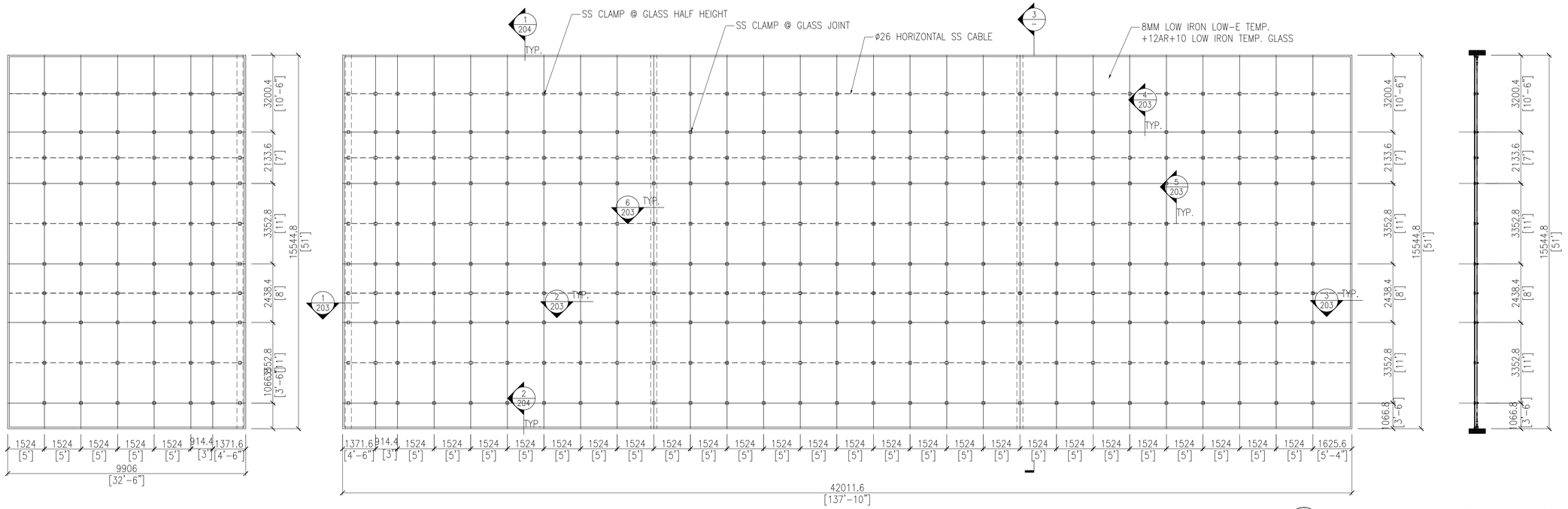

2 CABLE WALL ELEVATON(PROPOSAL 3)
SCALE: 1/8"=1'-0"

3 CABLE WALL SECTION(PROPOSAL3)
SCALE: 1/8"=1'-0"

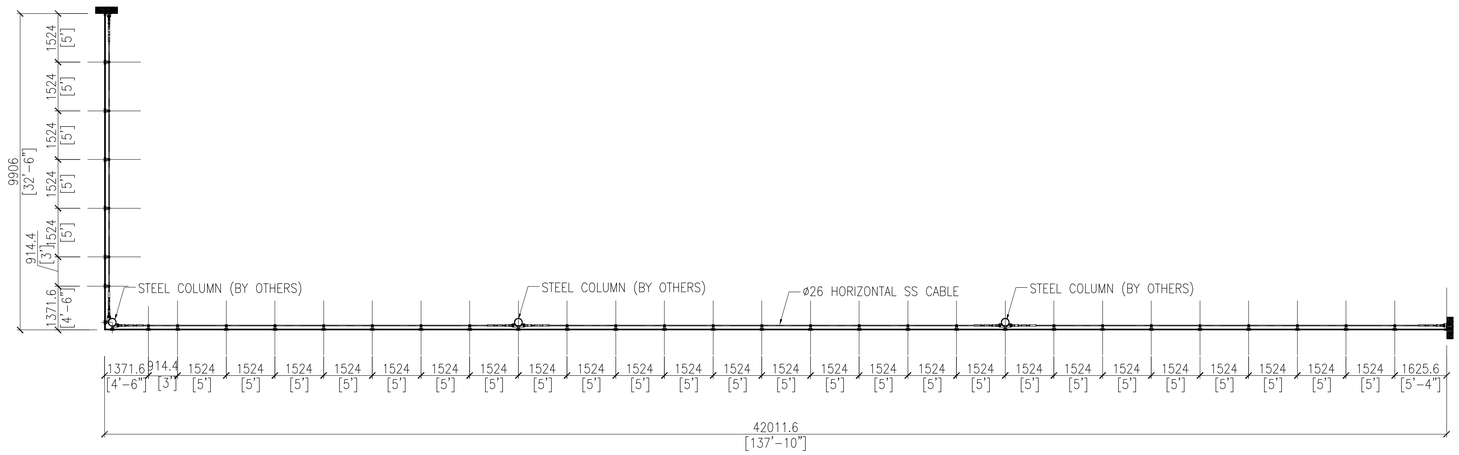

1 CABLE WALL PLAN(PROPOSAL 3)
SCALE: 1/8"=1'-0"

VERTICAL ø26 CABLE
HORIZONTAL ø 26 CABLE
3 COLUMNS TO BE ADDED

REV.	DESCRIPTION OR PURPOSE OF AMENDMENT	MM/DD/YY	EDIT
A	-	-	-

NAVIGATION

CUSTOMER

ARCHITECT

STRUCTURAL ENGINEER

MAIN CONTRACTOR

CURTAINWALL DESIGN

PARAGON

PROJECT TITLE

DRAWING TITLE
CABLE WALL
ELEVATION PLAN & SECTION
PROPOSAL 3

SCALE	SIZE	REV.
1/8"=1'-0"	A1	A

DRAWING STATUS
PROPOSAL

DESIGNED BY	DATE
KEAN	11/08/2010
CHECKED BY	APPROVED BY
OWEN	OWEN

DRAWING NO.
P000-103

E:\TENDER\20101107 PARKLAND HOSPITAL CABLE WALL\PROPOSAL\P000_PARKLAND_PROPOSAL_R1_20101107.dwg

PDF created with FinePrint pdfFactory trial version www.pdffactory.com

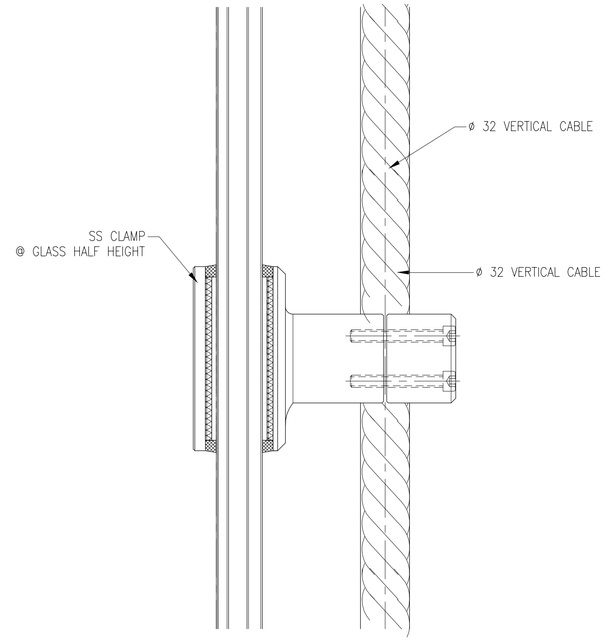

5 TYPICAL HORIZONTAL DETAIL@HALF GLASS HEIGHT
SCALE: 1"=1"

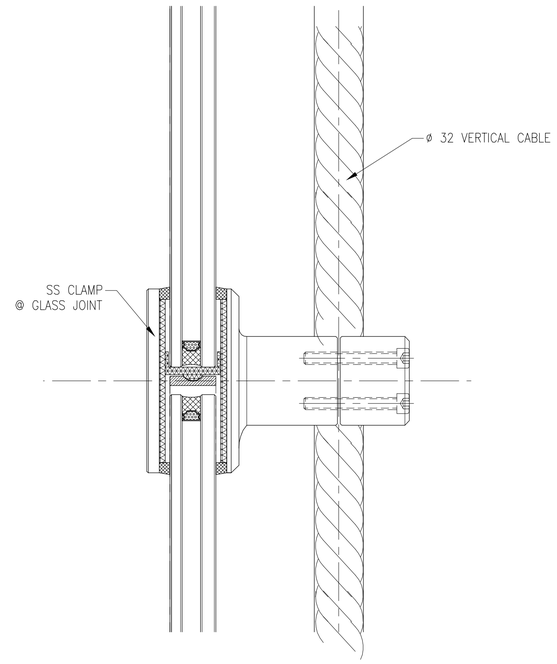

4 TYPICAL HORIZONTAL DETAIL@GLASS JOINT
SCALE: 1"=1"

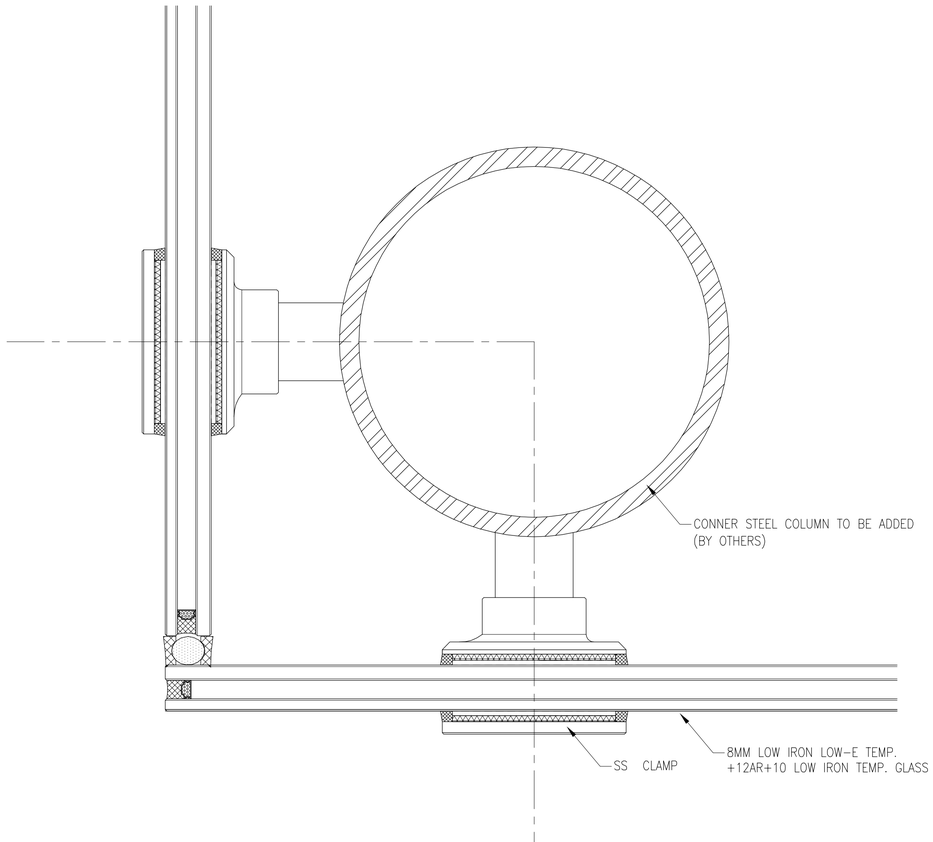

1 TYPICAL CORNER VERTICAL DETAIL
SCALE: 1"=1"

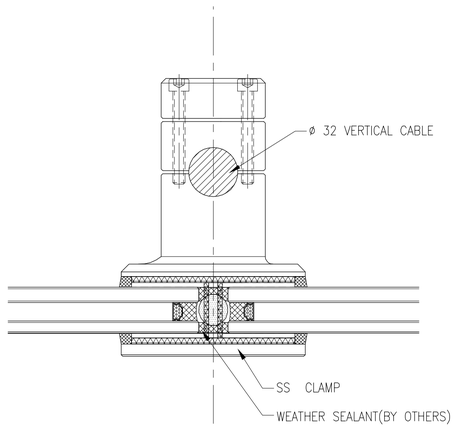

2 TYPICAL VERTICAL DETAIL
SCALE: 1"=1"

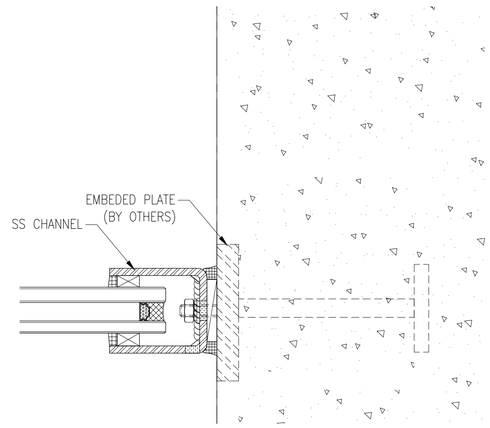

3 TYPICAL JAMB DETAIL
SCALE: 1"=1"

PROPOSAL 1
ONLY VERTICAL Ø32 CABLE
CONNER COLUMN TO BE ADDED

REV.	DESCRIPTION OR PURPOSE OF AMENDMENT	MM/DD/YY	EDIT

NAVIGATION

CUSTOMER

ARCHITECT

STRUCTURAL ENGINEER

MAIN CONTRACTOR

CURTAINWALL DESIGN

PARAGON

PROJECT TITLE

DRAWING TITLE
CABLE WALL
TYPICAL DETAIL
PROPOSAL 1

SCALE	SIZE	REV.
1/8"=1'-0"	A1	#

DRAWING STATUS
PROPOSAL

DESIGNED BY	DATE
KEAN	11/08/2010
CHECKED BY	APPROVED BY
OWEN	OWEN

DRAWING NO.
P000-201

E:\TENDER\20101107 PARKLAND HOSPITAL CABLE WALL\PROPOSAL\P000_PARKLAND_PROPOSAL_R1_20101107.dwg

PDF created with FinePrint pdfFactory trial version www.pdffactory.com

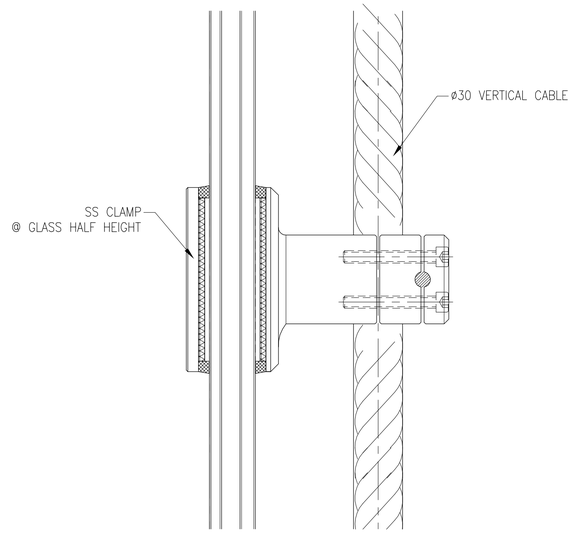

5 TYPICAL HORIZONTAL DETAIL@HALF GLASS HEIGHT
SCALE: 1"=1"

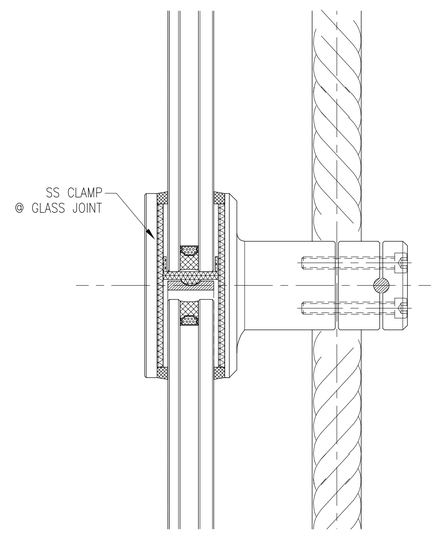

4 TYPICAL HORIZONTAL DETAIL@GLASS JOINT
SCALE: 1"=1"

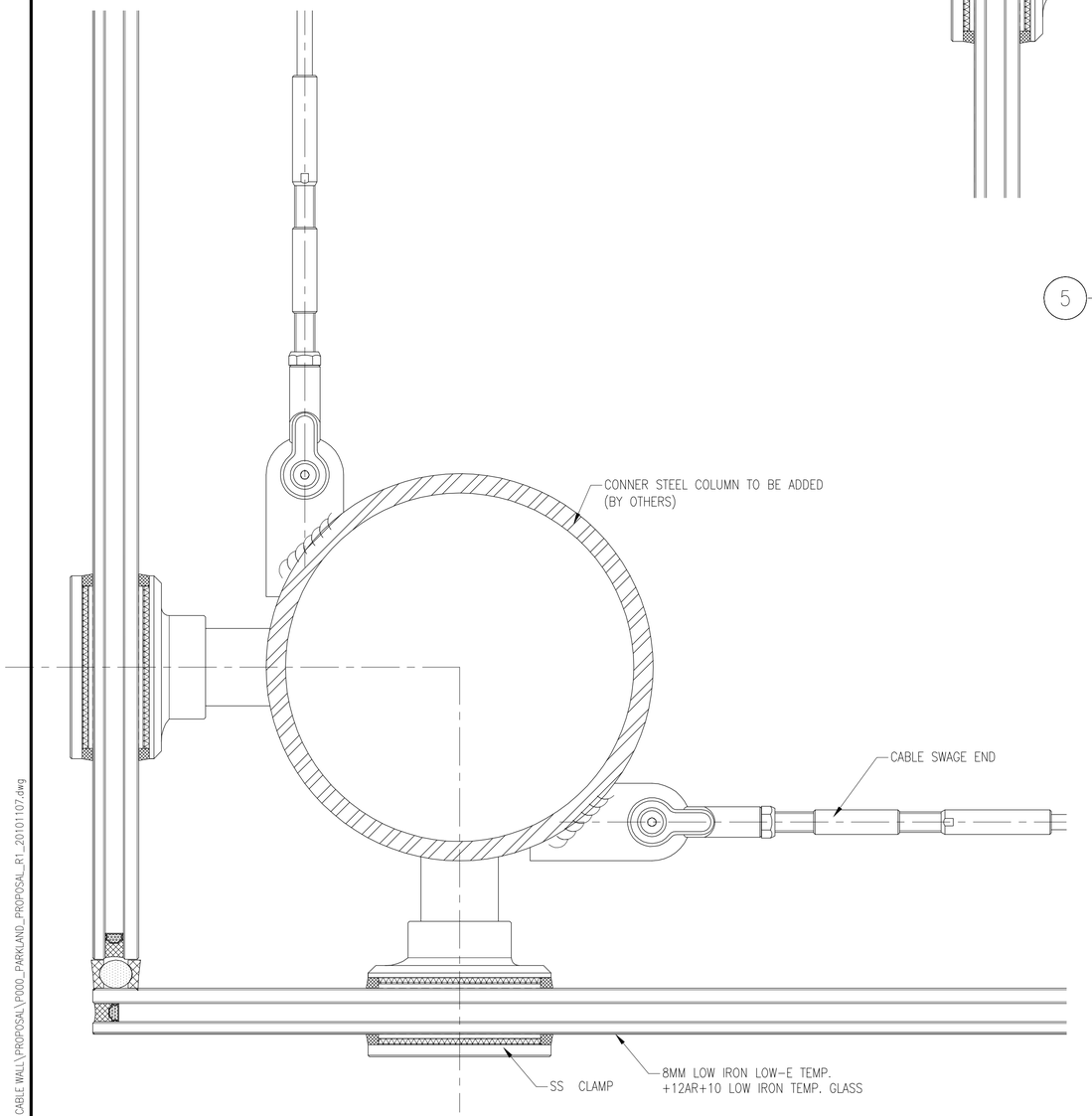

1 TYPICAL CORNER VERTICAL DETAIL
SCALE: 1"=1"

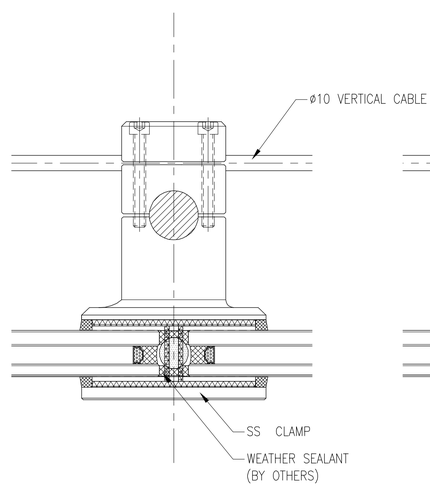

2 TYPICAL VERTICAL DETAIL
SCALE: 1"=1"

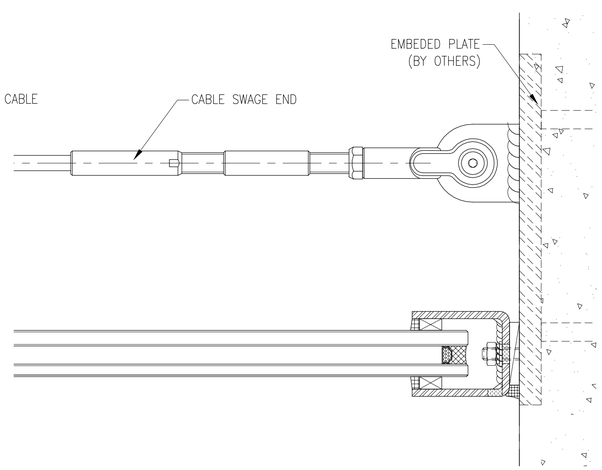

3 TYPICAL JAMB DETAIL
SCALE: 1"=1"

PROPOSAL 2
ONLY VERTICAL ø30 CABLE
HORIZONTAL ø 10 CABLE
CONNER COLUMN TO BE ADDED

REV.	DESCRIPTION OR PURPOSE OF AMENDMENT	MM/DD/YY	EDIT

NAVIGATION

CUSTOMER

ARCHITECT

STRUCTURAL ENGINEER

MAIN CONTRACTOR

CURTAINWALL DESIGN

PARAGON

PROJECT TITLE

DRAWING TITLE
CABLE WALL
TYPICAL DEATIL
PROPOSAL 2

SCALE	SIZE	REV.
1/8"=1'-0"	A1	####

DRAWING STATUS
PROPOSAL

DESIGNED BY	DATE
KEAN	11/08/2010
CHECKED BY	APPROVED BY
OWEN	OWEN

DRAWING NO.
P000-202

E:\TENDER\20101107 PARKLAND HOSPITAL CABLE WALL\PROPOSAL\P000_PARKLAND_PROPOSAL_R1_20101107.dwg

PDF created with FinePrint pdfFactory trial version www.pdffactory.com

VERTICAL ø26 CABLE
HORIZONTAL ø 26 CABLE
3 COLUMNS TO BE ADDED

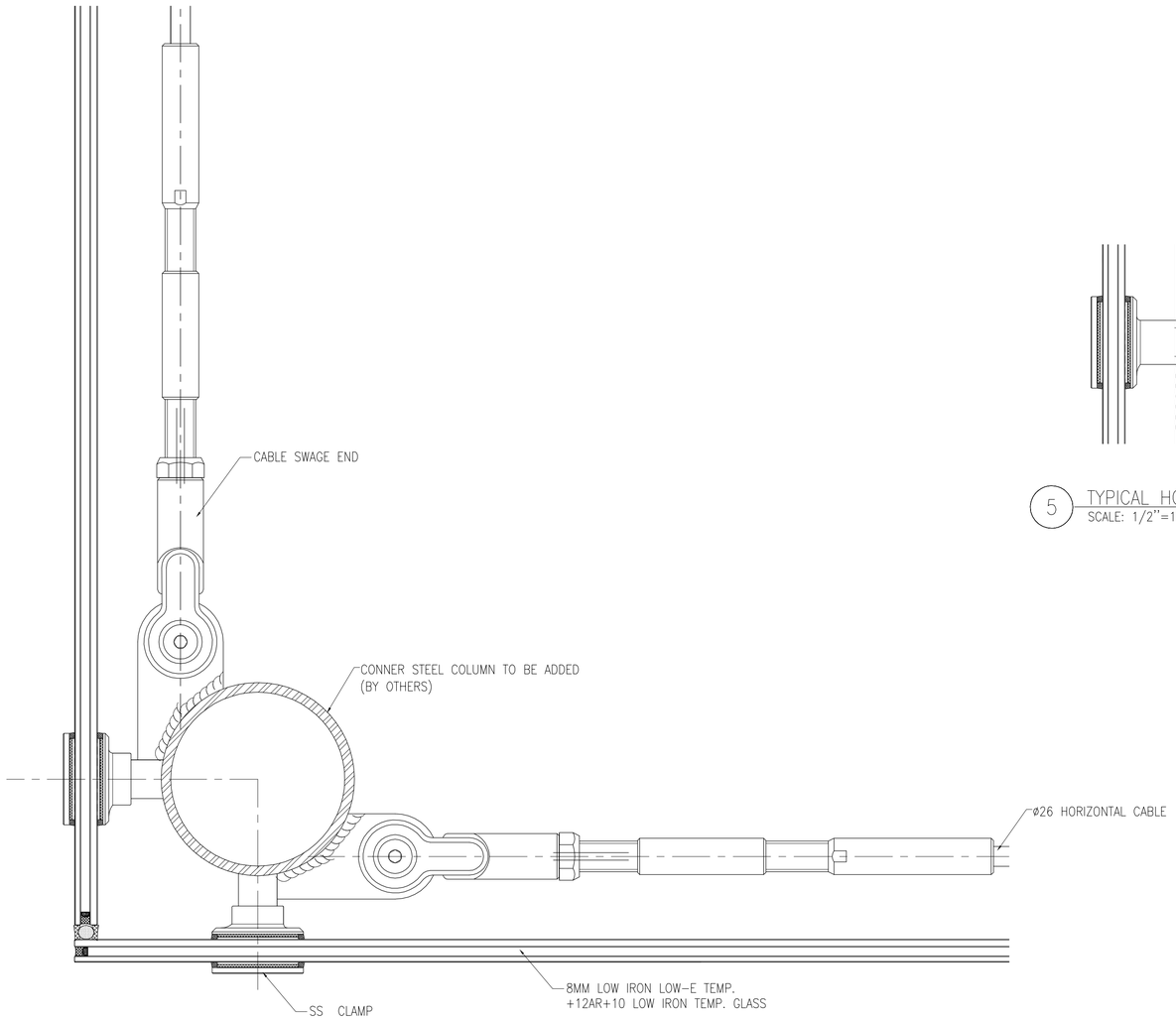

1 TYPICAL CORNER VERTICAL DETAIL
SCALE: 1/2"=1"

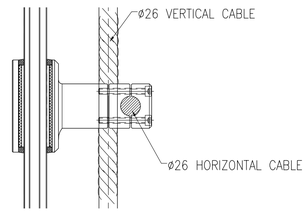

5 TYPICAL HORIZONTAL DETAIL@HALF GLASS HEIGHT
SCALE: 1/2"=1"

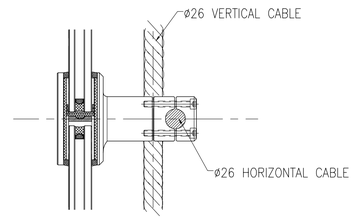

4 TYPICAL HORIZONTAL DETAIL@GLASS JOINT
SCALE: 1/2"=1"

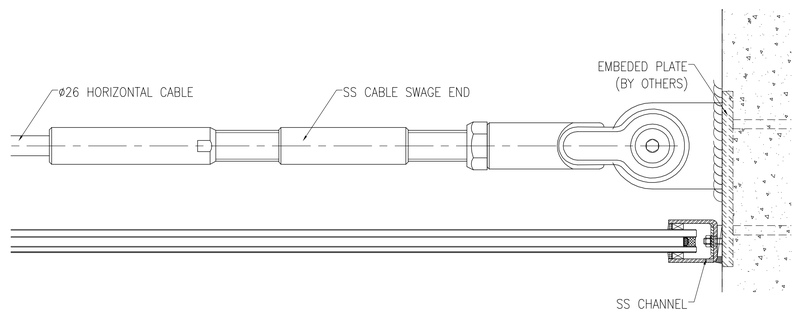

3 TYPICAL JAMB DETAIL
SCALE: 1/2"=1"

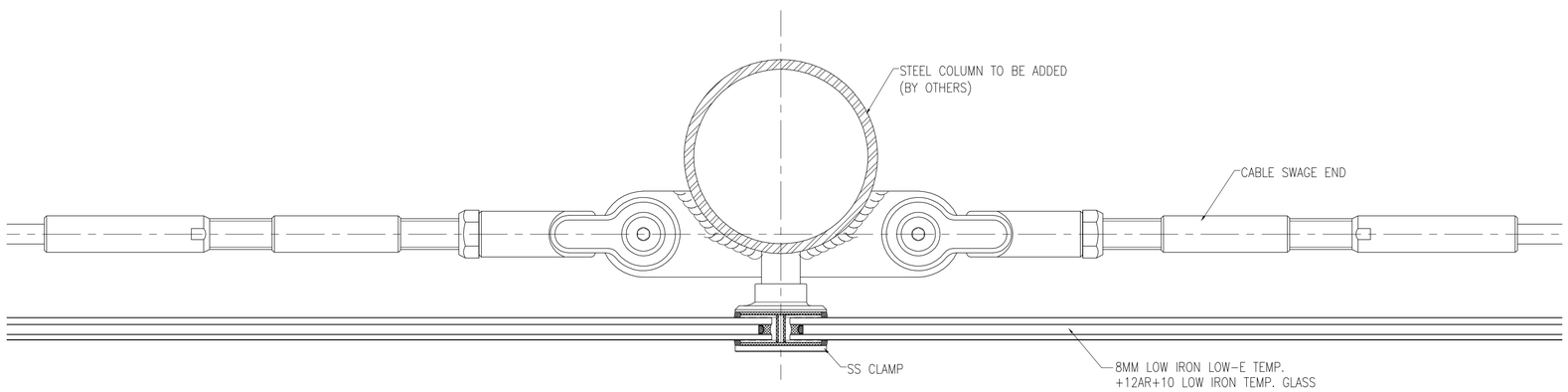

6 TYPICAL VERTICAL DETAIL@STEEL COLUMN
SCALE: 1/2"=1"

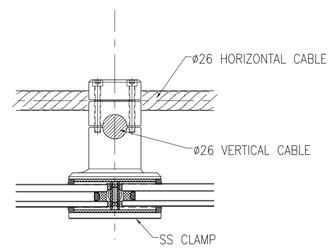

2 TYPICAL VERTICAL DETAIL
SCALE: 1/2"=1"

REV.	DESCRIPTION OR PURPOSE OF AMENDMENT	MM/DD/YY	EDIT

NAVIGATION

CUSTOMER

ARCHITECT

STRUCTURAL ENGINEER

MAIN CONTRACTOR

CURTAINWALL DESIGN

PARAGON

PROJECT TITLE

DRAWING TITLE
CABLE WALL
TYPICAL DETAIL
PROPOSAL 3

SCALE	SIZE	REV.
1/8"=1'-0"	A1	####

DRAWING STATUS
PROPOSAL

DESIGNED BY	DATE
KEAN	11/08/2010
CHECKED BY	APPROVED BY
OWEN	OWEN

DRAWING NO.
P000-203

E:\TENDER\20101107 PARKLAND HOSPITAL CABLE WALL\PROPOSAL\P000_PARKLAND_PROPOSAL_R1_20101107.dwg

PDF created with FinePrint pdfFactory trial version www.pdffactory.com

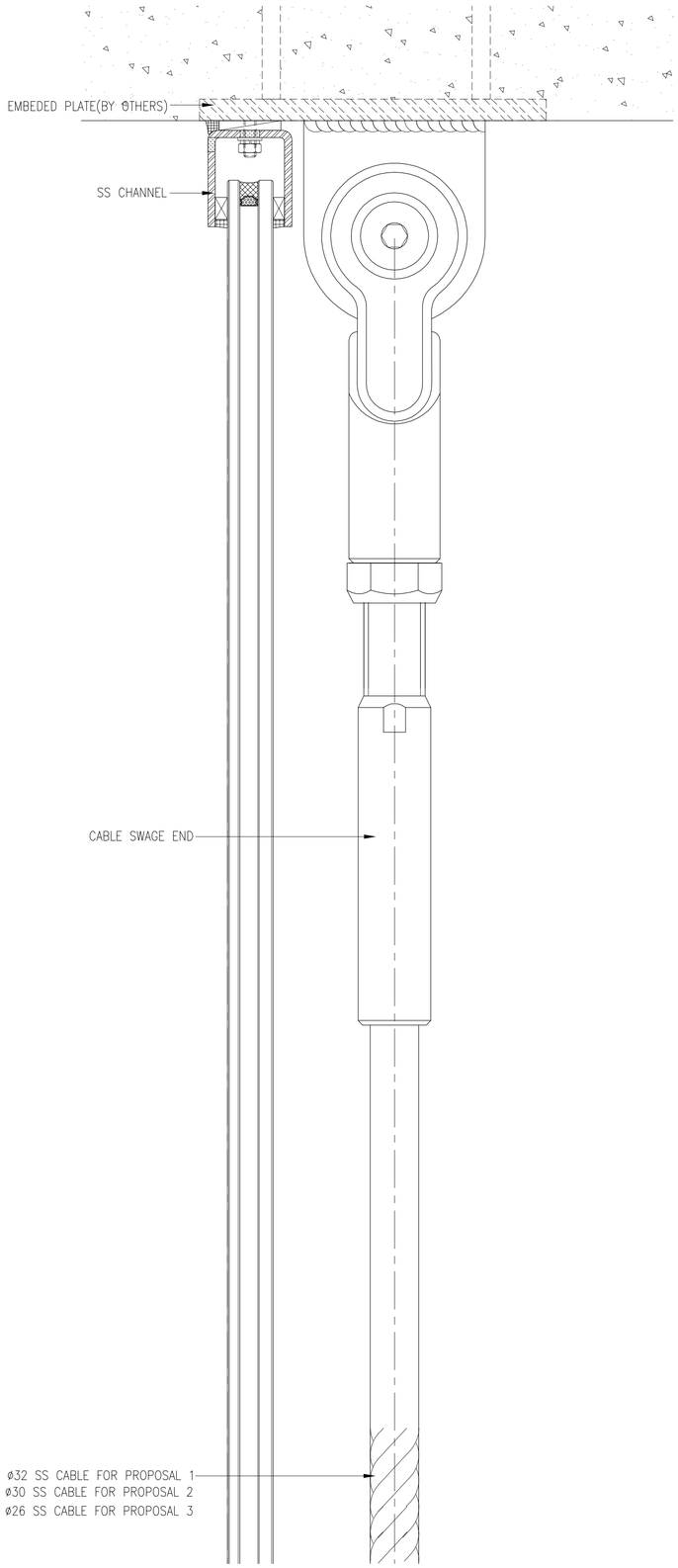

1 TYPICAL HEAD DETAIL
SCALE: 1"=1"

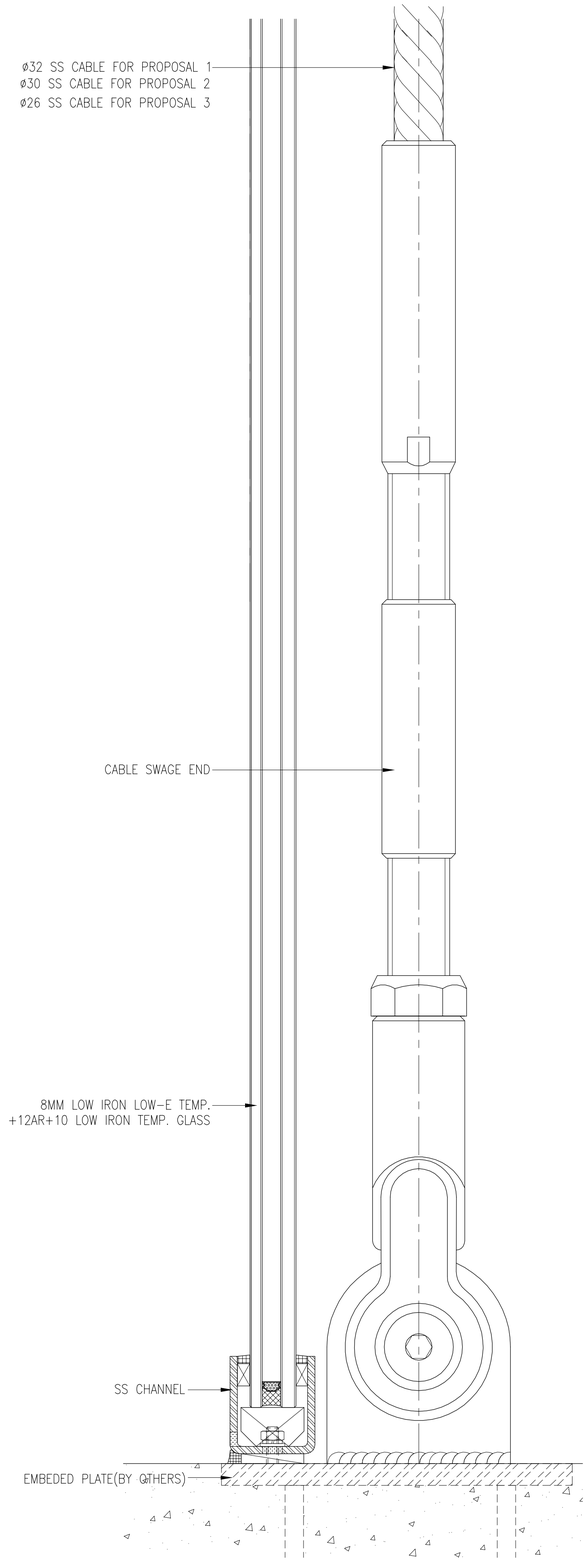

2 TYPICAL SILL DETAIL
SCALE: 1"=1"

REV.	DESCRIPTION OR PURPOSE OF AMENDMENT	MM/DD/YY	EDIT

NAVIGATION

CUSTOMER

ARCHITECT

STRUCTURAL ENGINEER

MAIN CONTRACTOR

CURTAINWALL DESIGN

PARAGON

PROJECT TITLE

DRAWING TITLE
CABLE WALL
SECTION DETAIL

SCALE	SIZE	REV.
1/8"=1'-0"	A1	####

DRAWING STATUS
PROPOSAL

DESIGNED BY	DATE
KEAN	11/08/2010
CHECKED BY	APPROVED BY
OWEN	OWEN

DRAWING NO.
P000-204

E:\TENDER\20101107 PARKLAND HOSPITAL CABLE WALL\PROPOSAL\P000_PARKLAND_PROPOSAL_R1_20101107.dwg

PDF created with FinePrint pdfFactory trial version www.pdffactory.com

paragon

architectural products, llc

PLEASE NOTE: *The details indicated herein are from past projects are should be considered 'generic' details, which may or may not apply to your project.*

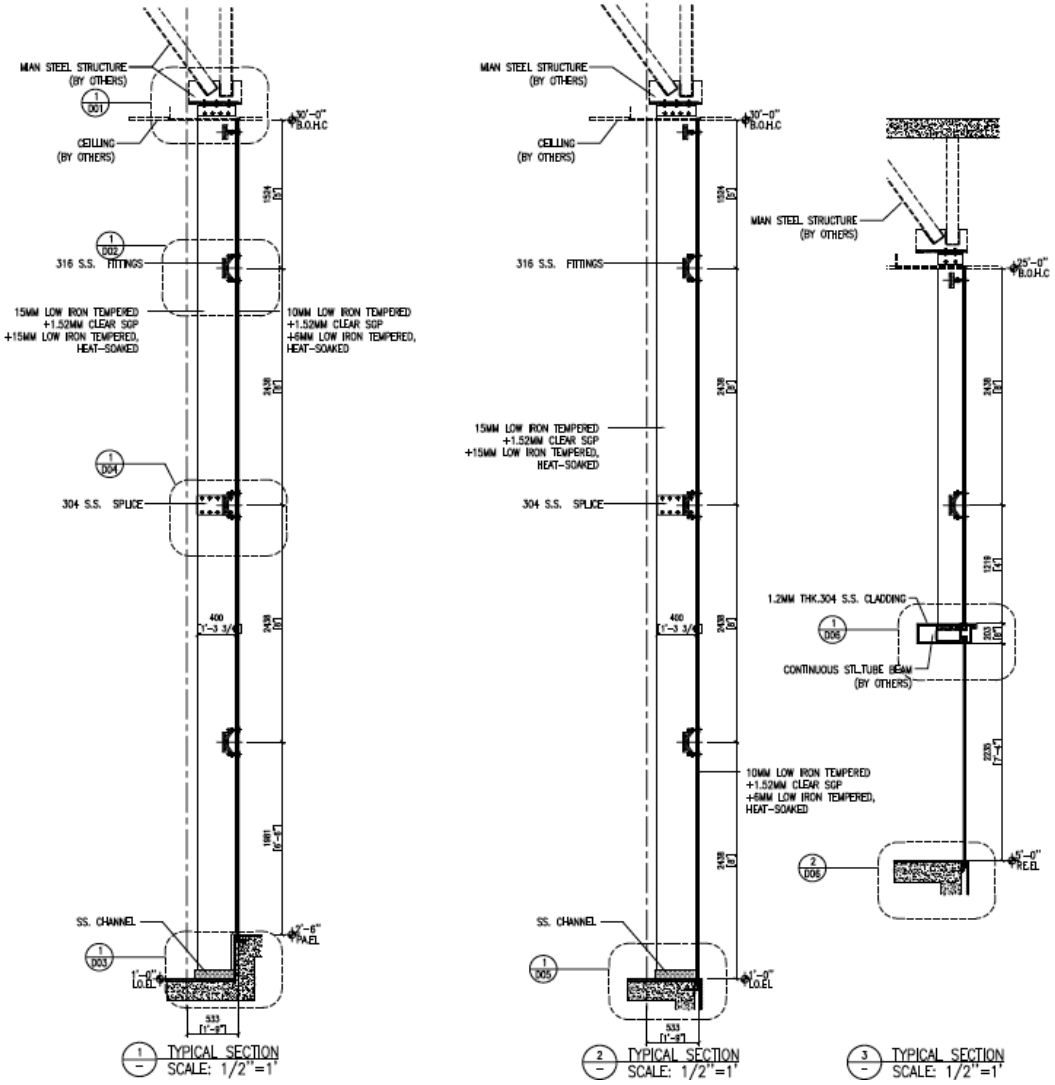

10239 EAST SHANGRI - LA SCOTTSDALE, AZ 85260 U.S.A.
Phone 480-767-8266 Fax 480-767-8267 www.glassengineer.com

paragon

architectural products, llc

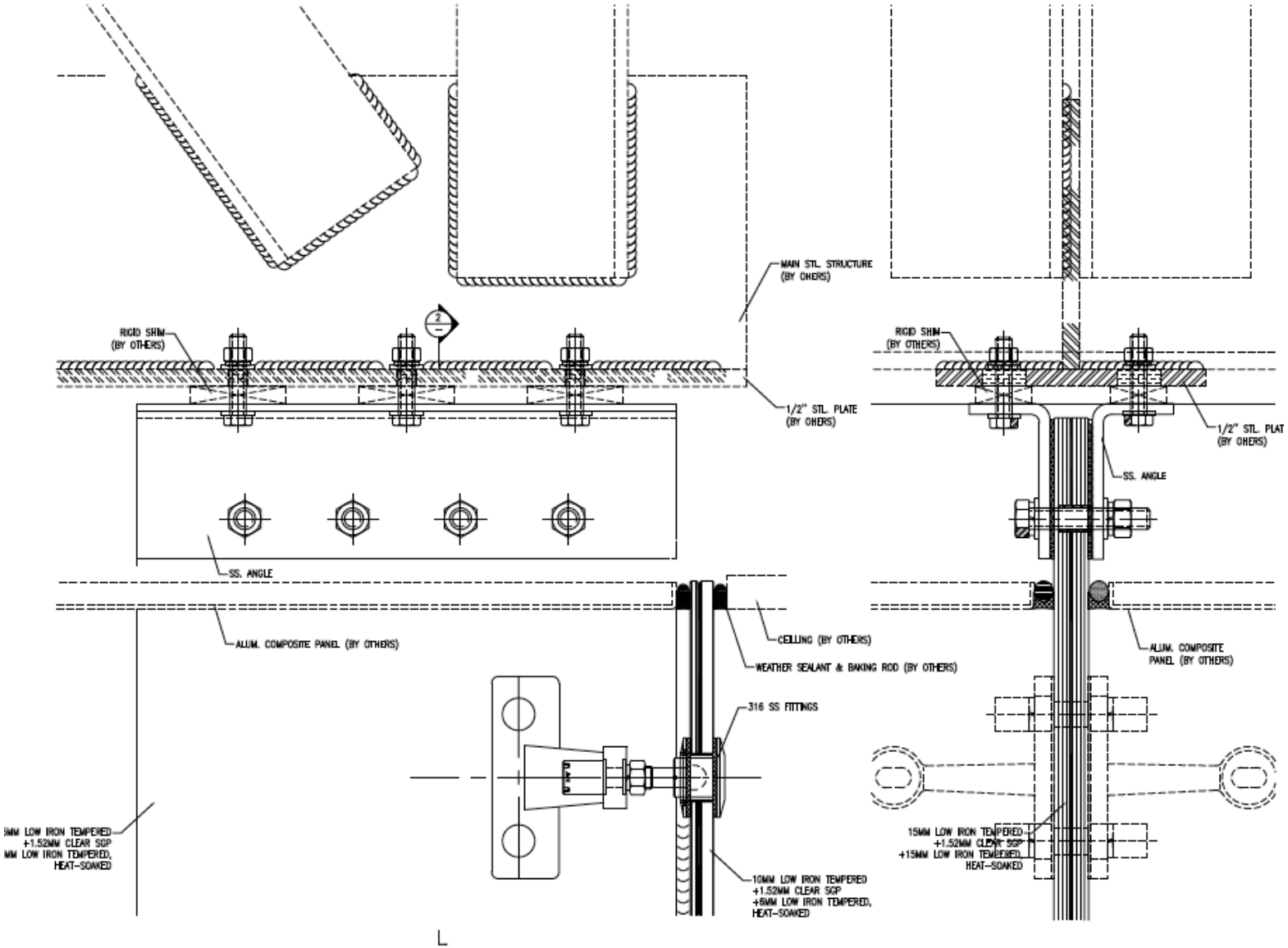

1 TYPICAL VERTICAL DETAIL
SCALE:1/2"=1"

10239 EAST SHANGRI - LA SCOTTSDALE, AZ 85260 U.S.A.
Phone 480-767-8266 Fax 480-767-8267 www.glassengineer.com

paragon
architectural products, llc

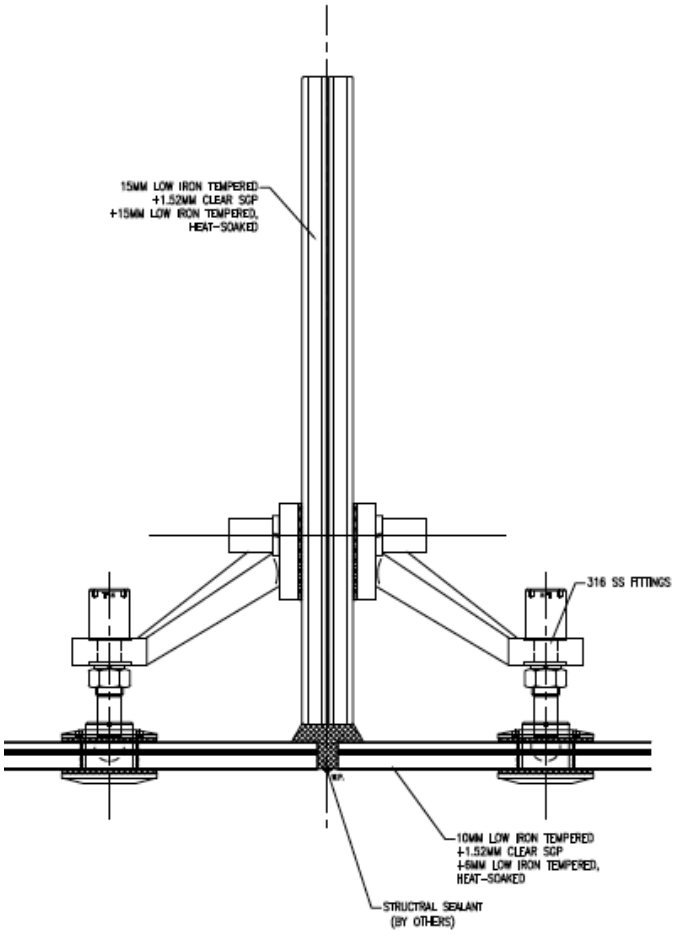

2 TYPICAL DETAIL
SCALE:1/2"=1"

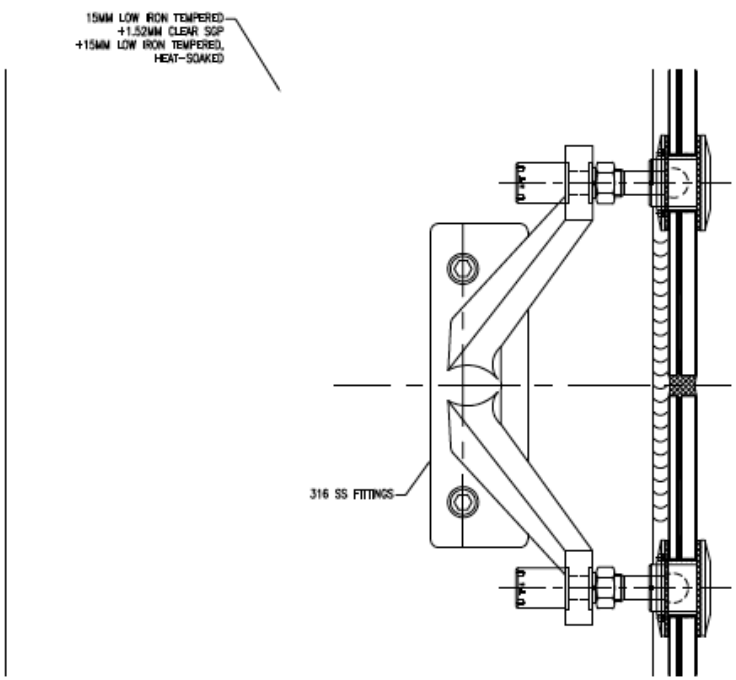

1 TYPICAL VERTICAL DETAIL
SCALE:1/2"=1"

10239 EAST SHANGRI - LA SCOTTSDALE, AZ 85260 U.S.A.
Phone 480-767-8266 Fax 480-767-8267 www.glassengineer.com

paragon
architectural products, llc

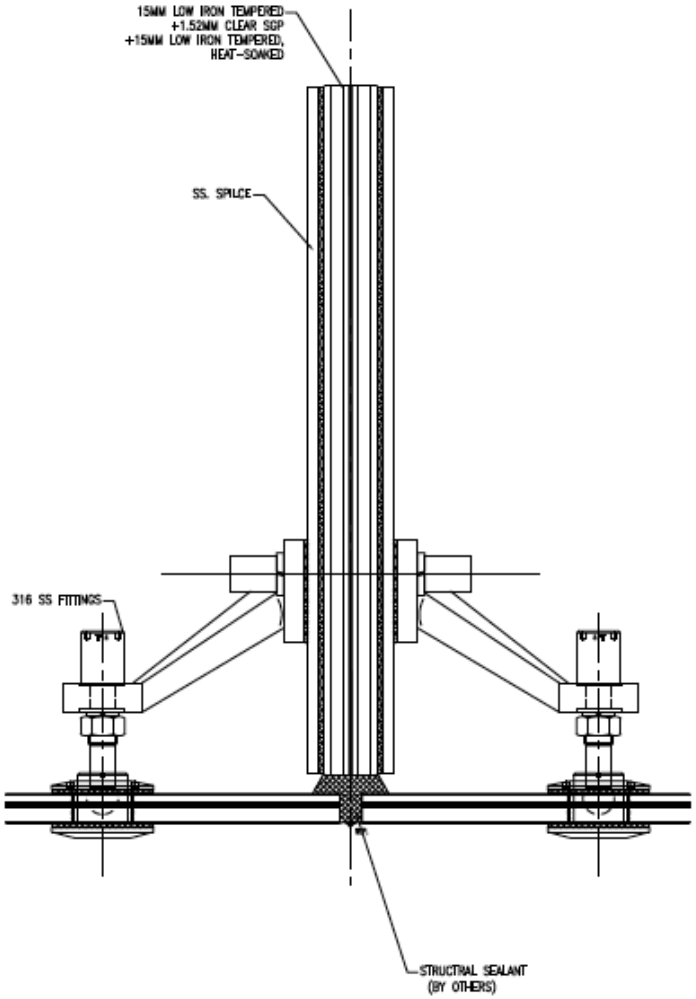

2 TYPICAL DETAIL
SCALE:1/2"=1"

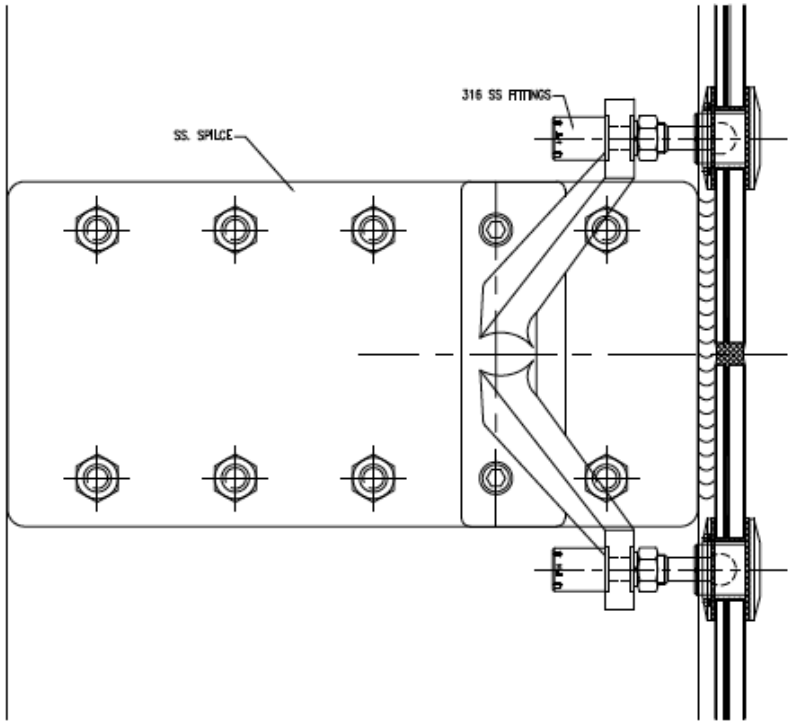

1 TYPICAL VERTICAL DETAIL
SCALE:1/2"=1"

10239 EAST SHANGRI - LA SCOTTSDALE, AZ 85260 U.S.A.
Phone 480-767-8266 Fax 480-767-8267 www.glassengineer.com

paragon

architectural products, llc

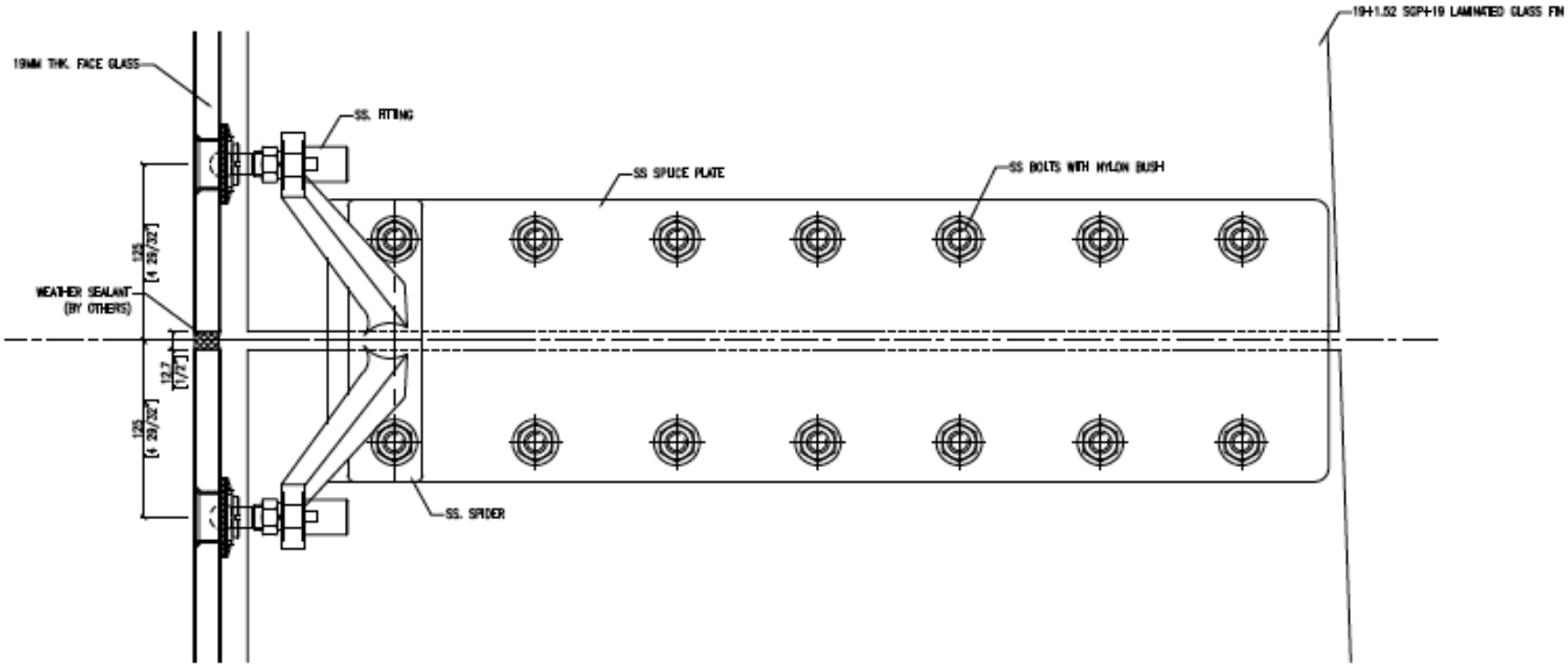

2 TYPICAL SECTION PLAN
SCALE: 6"=1'-0"

10239 EAST SHANGRI - LA SCOTTSDALE, AZ 85260 U.S.A.
Phone 480-767-8266 Fax 480-767-8267 www.glassengineer.com

paragon

architectural products, llc

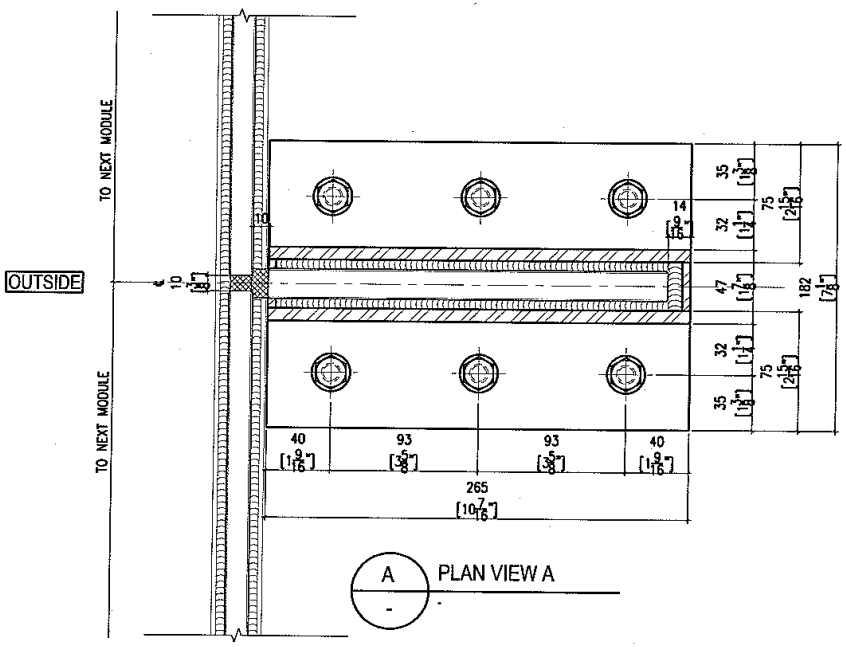

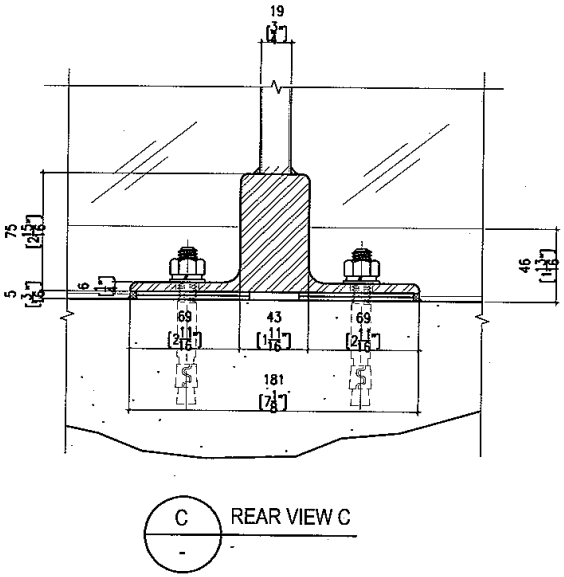

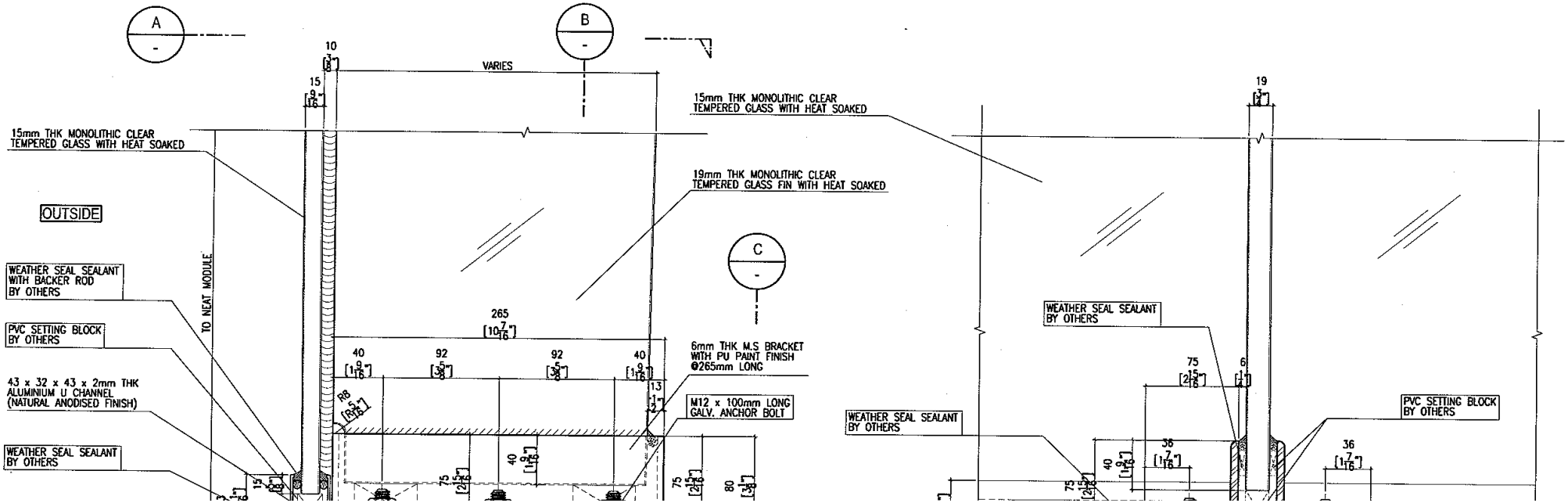

paragon
architectural products, llc

INSULATED GLASS UNIT w/ POINT SUPPORTED CONNECTION.

The details shown here are generic set-ups and may not be suitable for your glazing system.
Please contact Paragon for further design assistance.

#1. IGU w/ Internal Puck. Point Support and Puck does not penetrate outboard lite.

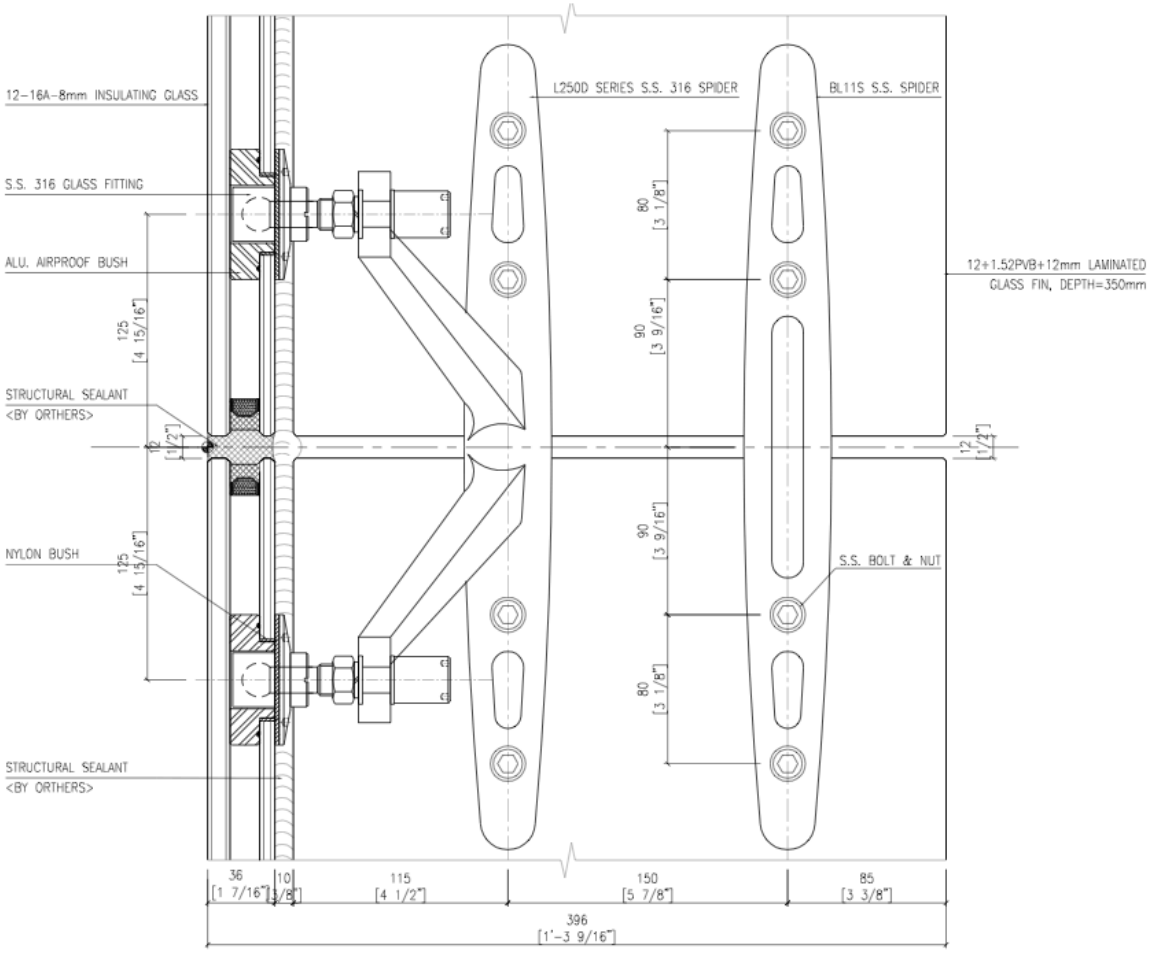

01 D01 TYP. VERTICAL DETAIL

Talking Stick Resort, Casino Arizona, Scottsdale, AZ

10239 EAST SHANGRI - LA SCOTTSDALE, AZ 85260 U.S.A.
Phone 480-767-8266 Fax 480-767-8267 www.glassengineer.com

#2. IGU w/ Point Support penetrating outboard lite w/ countersunk hole / countersunk fitting head.

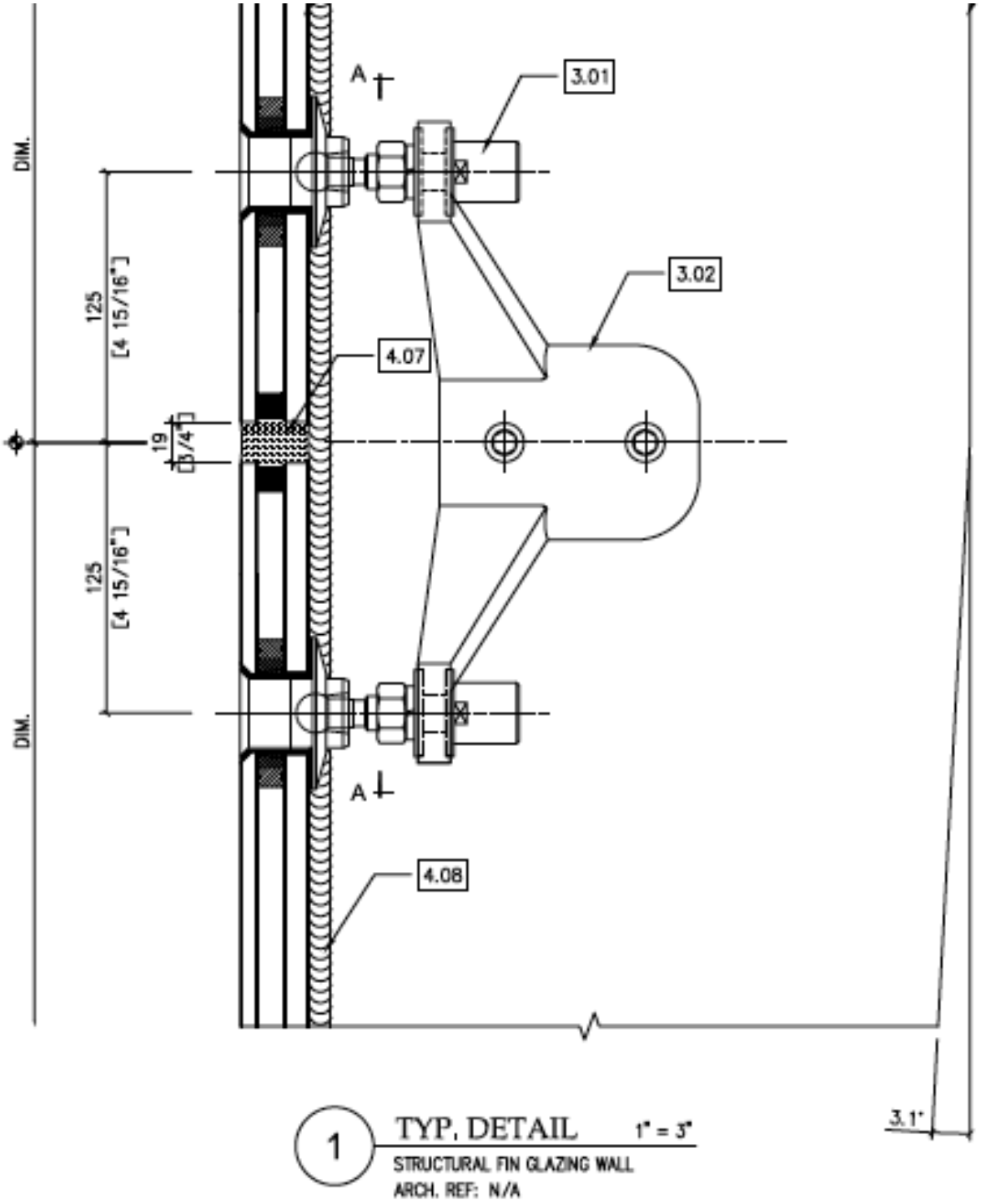

10239 EAST SHANGRI - LA SCOTTSDALE, AZ 85260 U.S.A.
Phone 480-767-8266 Fax 480-767-8267 www.glassengineer.com

paragon
architectural products, llc

#3. IGU w/ Point Support penetrating outboard lite w/ standard thru hole, cap / button fitting head.

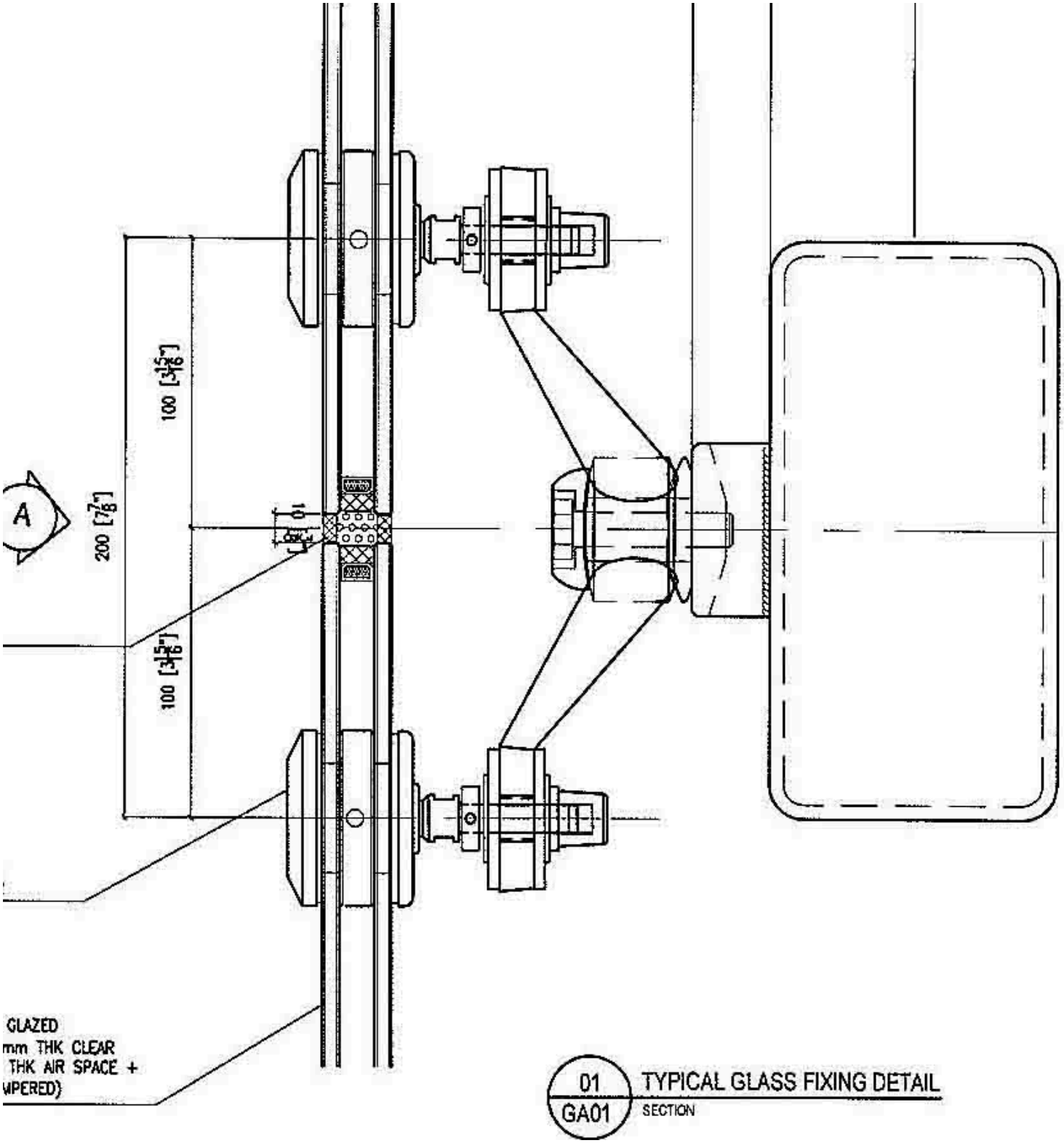

10239 EAST SHANGRI - LA SCOTTSDALE, AZ 85260 U.S.A.
Phone 480-767-8266 Fax 480-767-8267 www.glassengineer.com

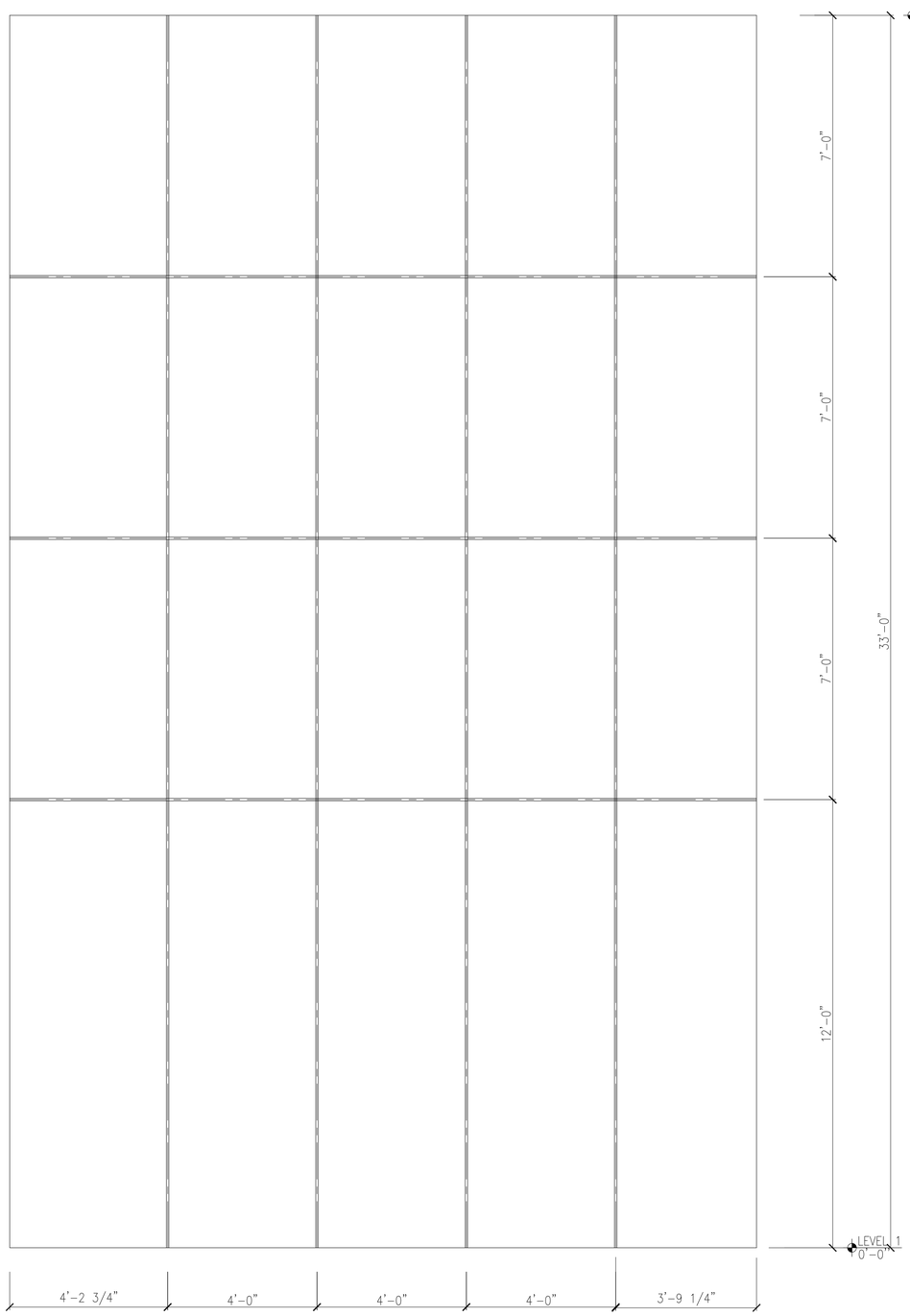

2 CURTAIN WALL 2A PARTIAL ELEVATION
SCALE: 1/2"=1'-0"

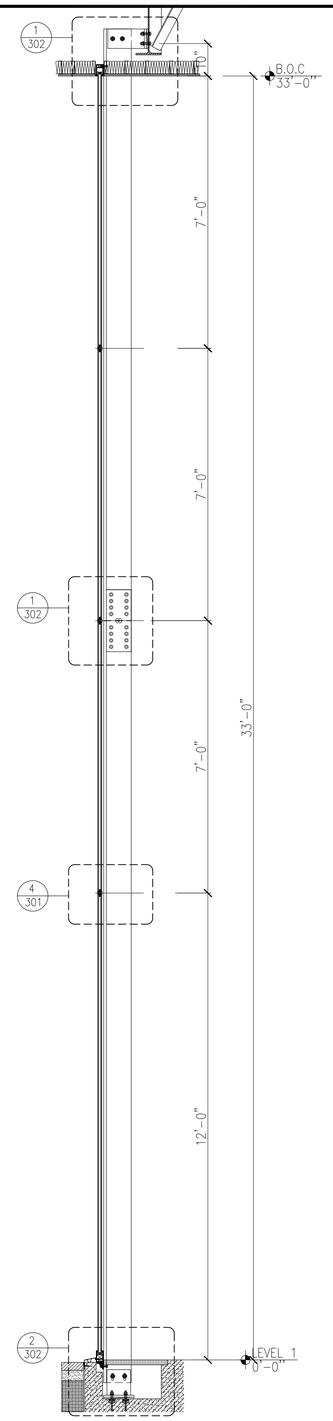

3 CURTAIN WALL 2A SECTION
SCALE: 1/2"=1'-0"

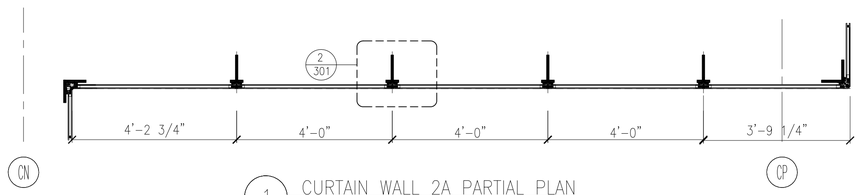

1 CURTAIN WALL 2A PARTIAL PLAN
SCALE: 1/2"=1'-0"

REV.	DESCRIPTION OR PURPOSE OF AMENDMENT	MM/DD/YY	EDIT

NAVIGATION

GLAZING CUSTOMER

ARCHITECT

Hellmuth, Obata + Kassabaum, L.P.
3200 Southwest Freeway, Suite 900
Houston, TX 77027 USA
t +1 713 407 7700 f +1 713 407 7809

STRUCTURAL ENGINEER

GENERAL CONTRACTOR

PARAGON
ARCHITECTURAL PRODUCTS

PROJECT TITLE

Schlumberger

STC Sugar Land
300 Schlumberger Dr
Sugar Land, TX 77478

DRAWING TITLE
CURTAIN WALL TYPE 2A
.
PLAN,ELEVATION &SECTION

SCALE	SIZE	REV.
AS SHOWN	A1	.

DRAWING STATUS
PROPOSAL

DESIGNED BY	DATE
KEAN	06/06/16
CHECKED BY	APPROVED BY
OWEN	OWEN

DRAWING NO.
101

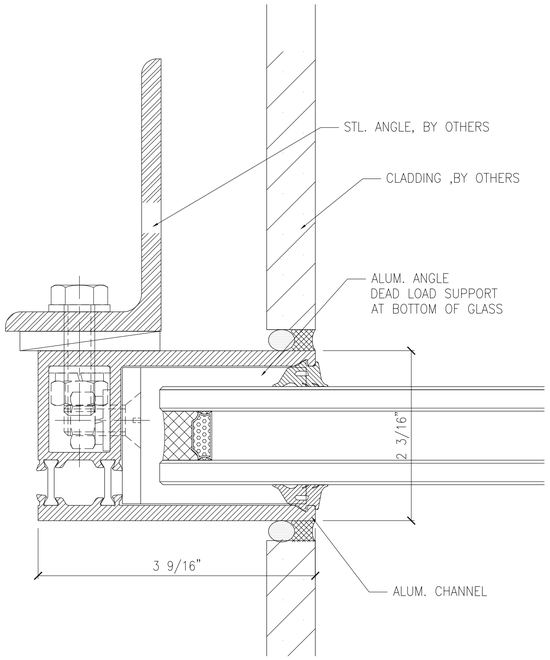

1 TYPICAL JAMB DETAIL
SCALE: 1"=1"

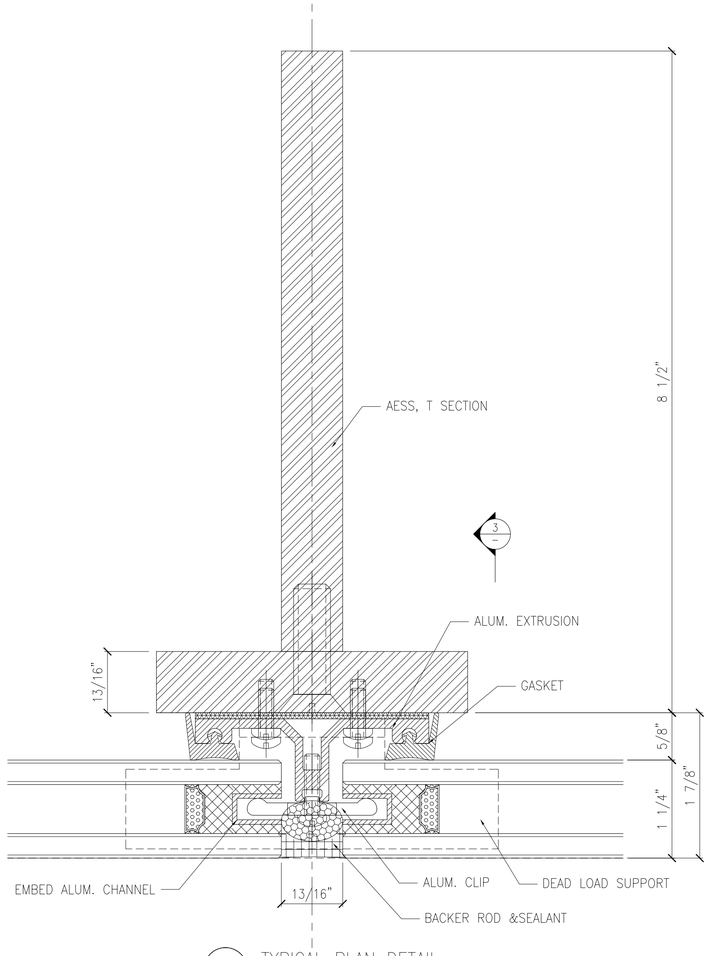

2 TYPICAL PLAN DETAIL
SCALE: 1"=1"

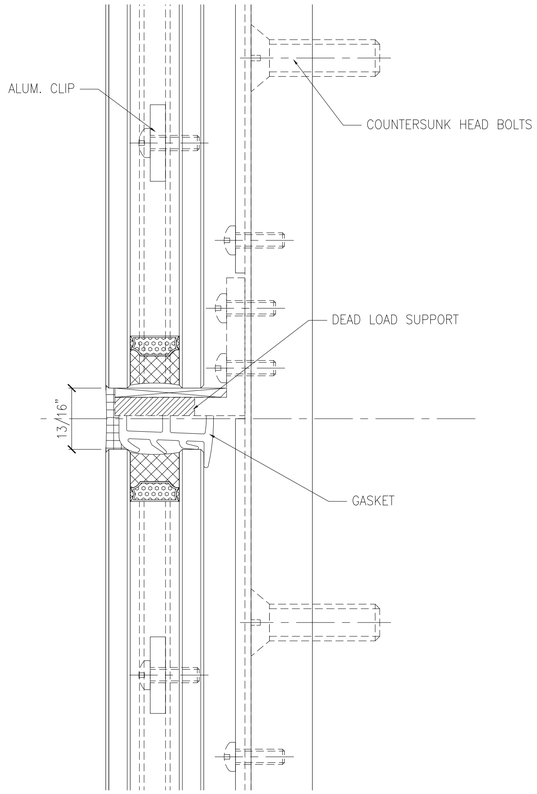

3 TYPICAL SECTION DETAIL
SCALE: 1"=1"

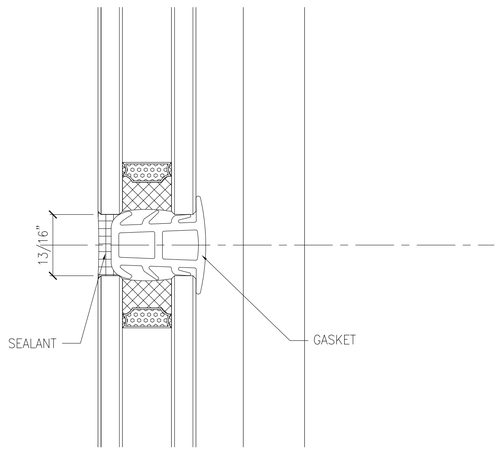

4 GLASS JOINT DETAIL
SCALE: 1"=1"

REV.	DESCRIPTION OR PURPOSE OF AMENDMENT	MM/DD/YY	EDIT

NAVIGATION

GLAZING CUSTOMER

ARCHITECT

Hellmuth, Obata + Kassabaum, L.P.
3200 Southwest Freeway, Suite 900
Houston, TX 77027 USA
t +1 713 407 7700 f +1 713 407 7809

STRUCTURAL ENGINEER

GENERAL CONTRACTOR

PARAGON
ARCHITECTURAL PRODUCTS

PROJECT TITLE

Schlumberger

STC Sugar Land

300 Schlumberger Dr
Sugar Land, TX 77478

DRAWING TITLE

CURTAIN WALL TYPE 2A

.

TYPICAL DETAIL

SCALE	SIZE	REV.
AS SHOWN	A1	.

DRAWING STATUS
PROPOSAL

DESIGNED BY	DATE
KEAN	06/06/16
CHECKED BY	APPROVED BY
OWEN	OWEN

DRAWING NO.
301

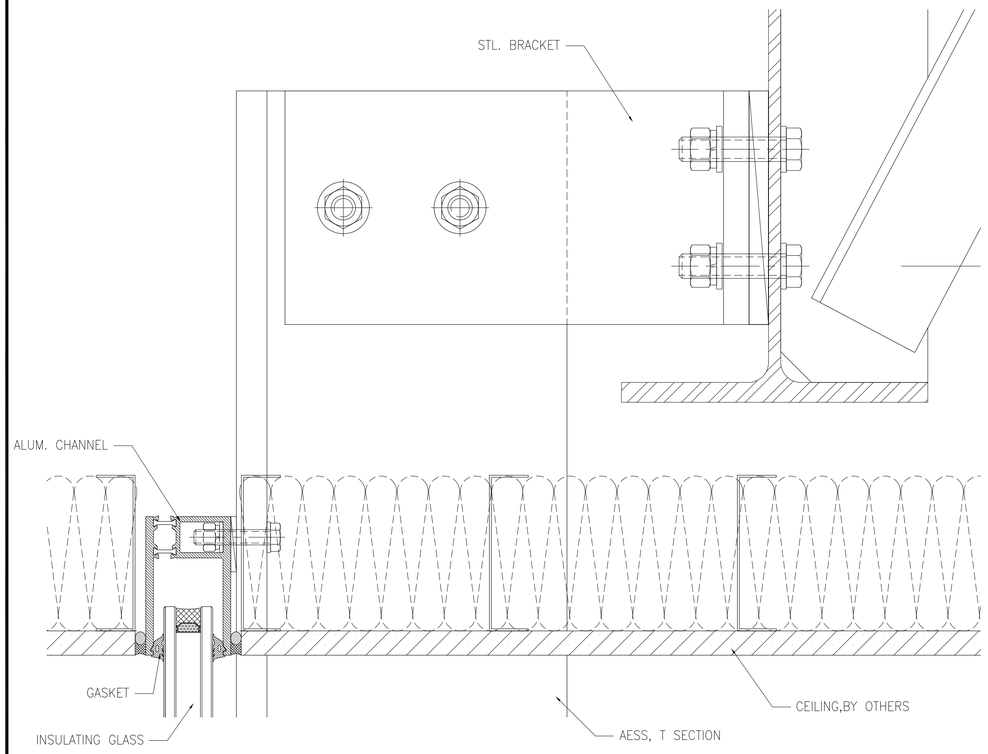

1 TYPICAL HEAD DETAIL
SCALE: 6"=1'-0"

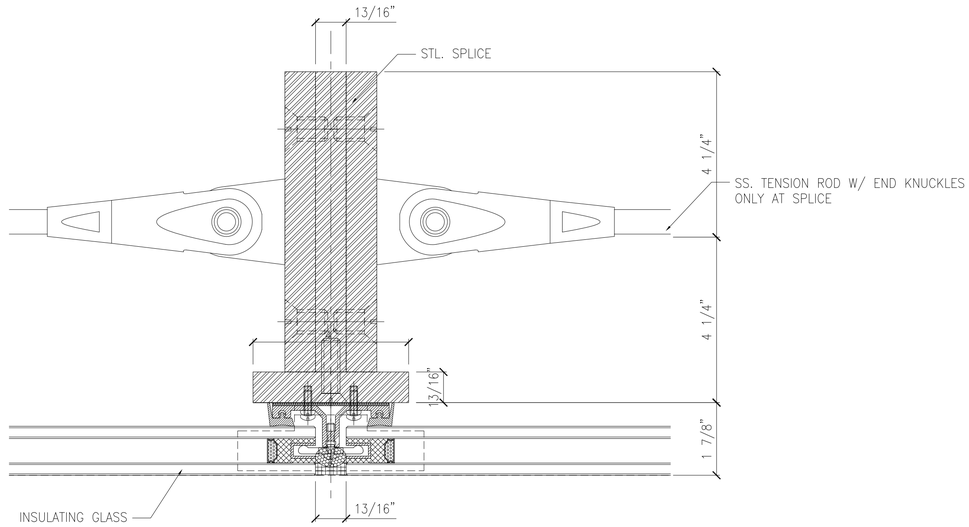

3 SPLICE DETAIL
SCALE: 6"=1'-0"

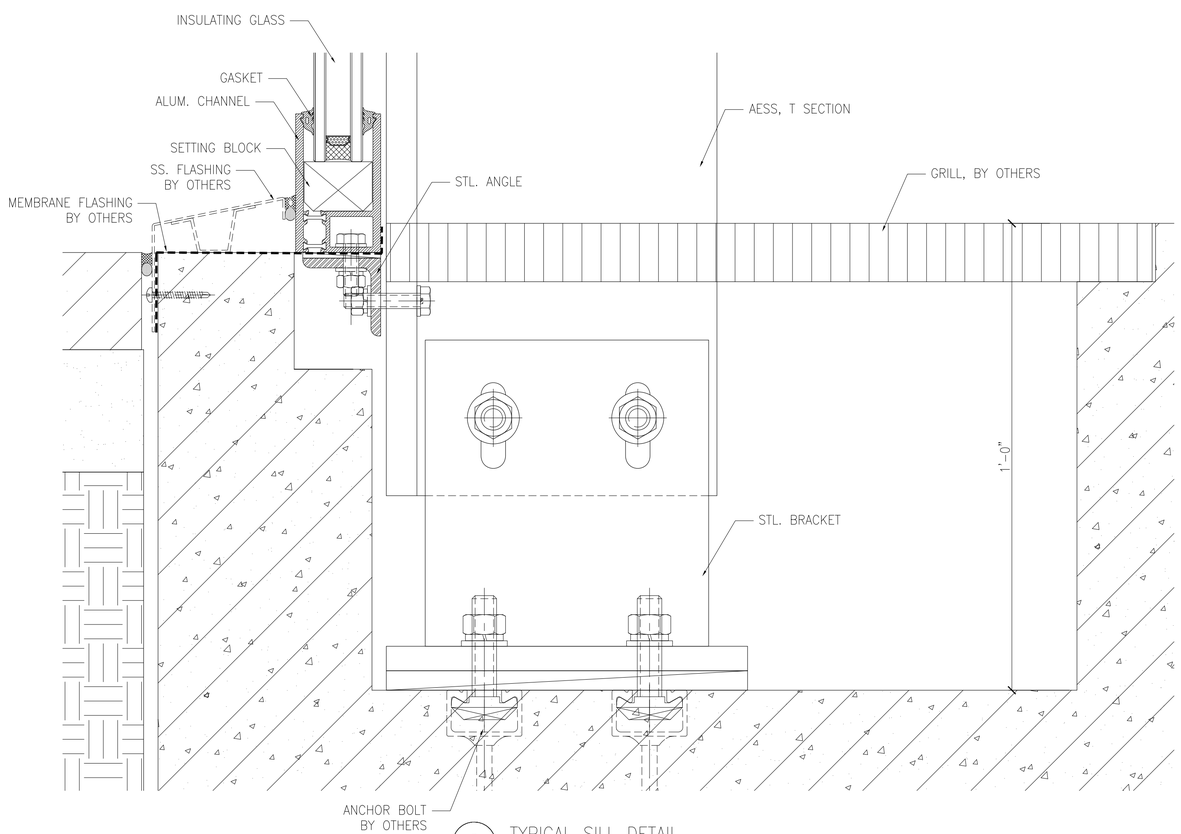

2 TYPICAL SILL DETAIL
SCALE: 6"=1'-0"

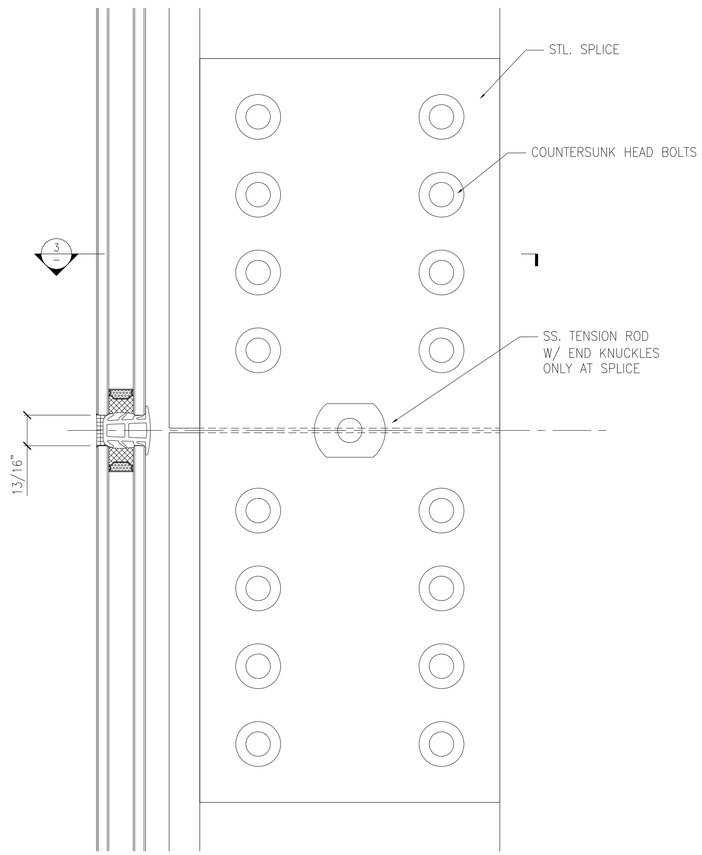

4 SPLICE DETAIL
SCALE: 6"=1'-0"

REV.	DESCRIPTION OR PURPOSE OF AMENDMENT	MM/DD/YY	EDIT

NAVIGATION

GLAZING CUSTOMER

ARCHITECT

Hellmuth, Obata + Kassabaum, L.P.
3200 Southwest Freeway, Suite 900
Houston, TX 77027 USA
t +1 713 407 7700 f +1 713 407 7809

STRUCTURAL ENGINEER

GENERAL CONTRACTOR

PARAGON
ARCHITECTURAL PRODUCTS

PROJECT TITLE

Schlumberger

STC Sugar Land
300 Schlumberger Dr
Sugar Land, TX 77478

DRAWING TITLE
CURTAIN WALL TYPE 2A
.
TYPICAL DETAIL

SCALE	SIZE	REV.
AS SHOWN	A1	.

DRAWING STATUS
PROPOSAL

DESIGNED BY	DATE
KEAN	06/06/16
CHECKED BY	APPROVED BY
OWEN	OWEN

DRAWING NO.
302

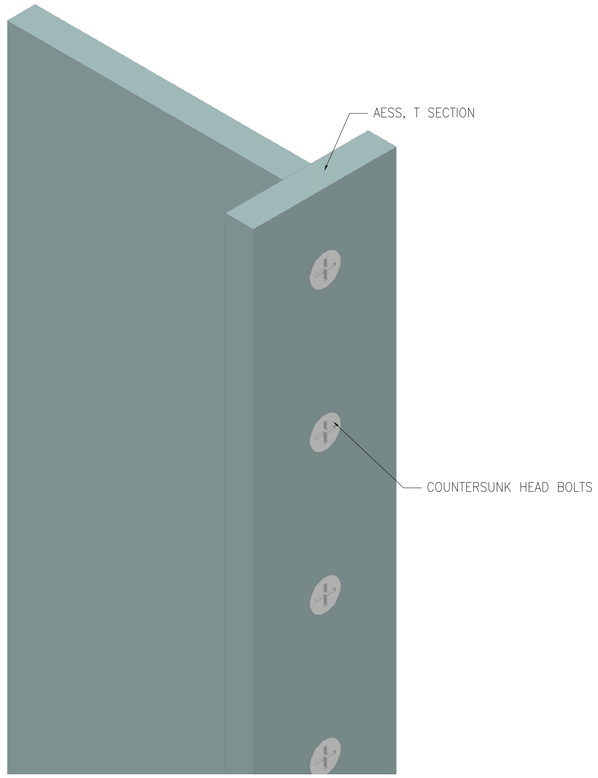

1 AESS, T SECTION
SCALE: N/A

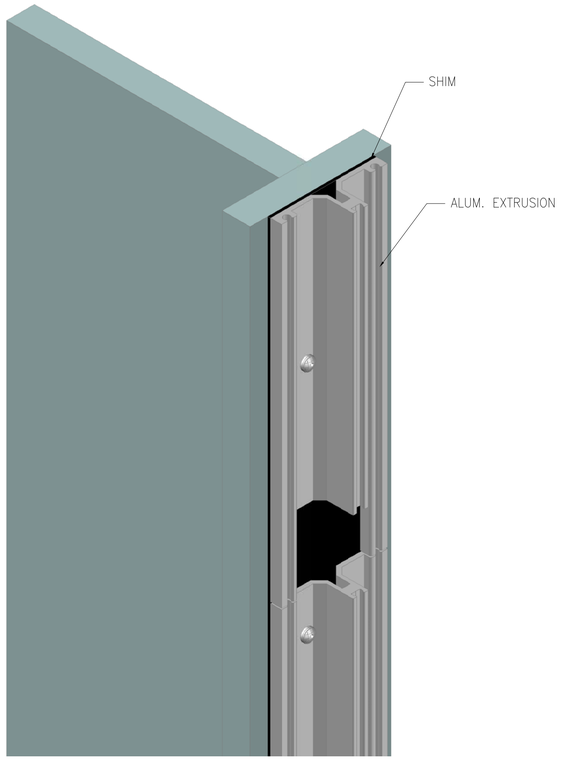

2 ALUM. EXTRUSION
SCALE: N/A

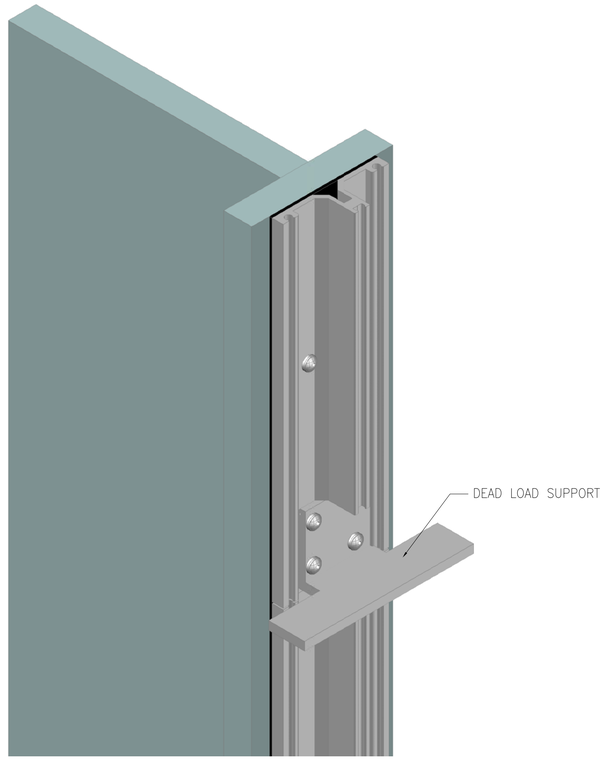

3 DEAD LOAD SUPPORT DETAIL
SCALE: N/A

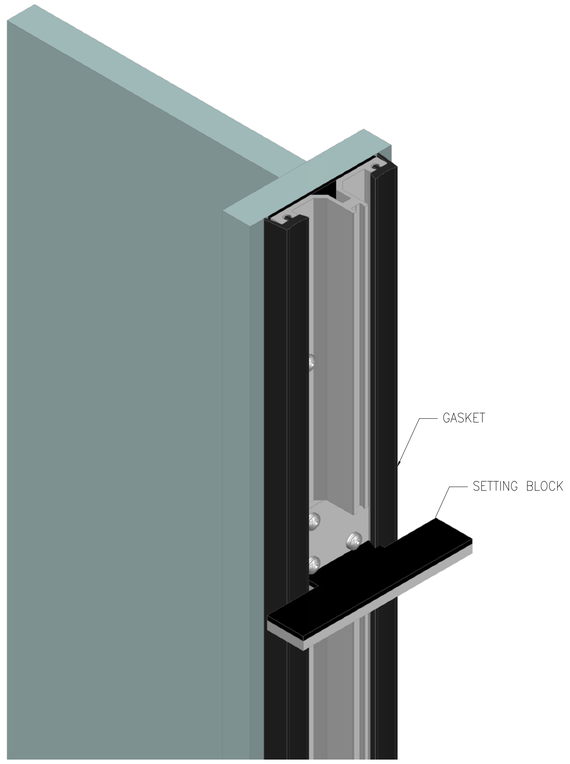

4 GASKET & SETTING BLOCK
SCALE: N/A

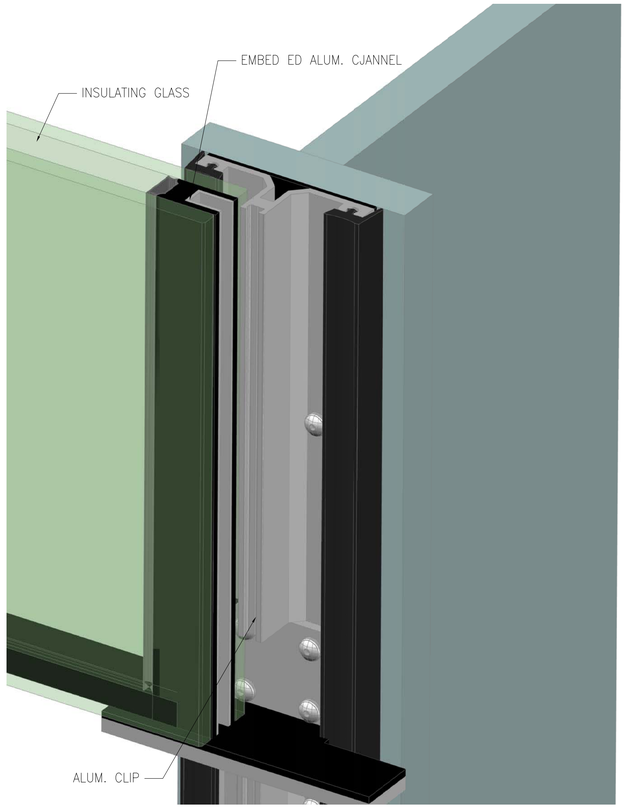

5 GLASS& CLIP DETAIL
SCALE: N/A

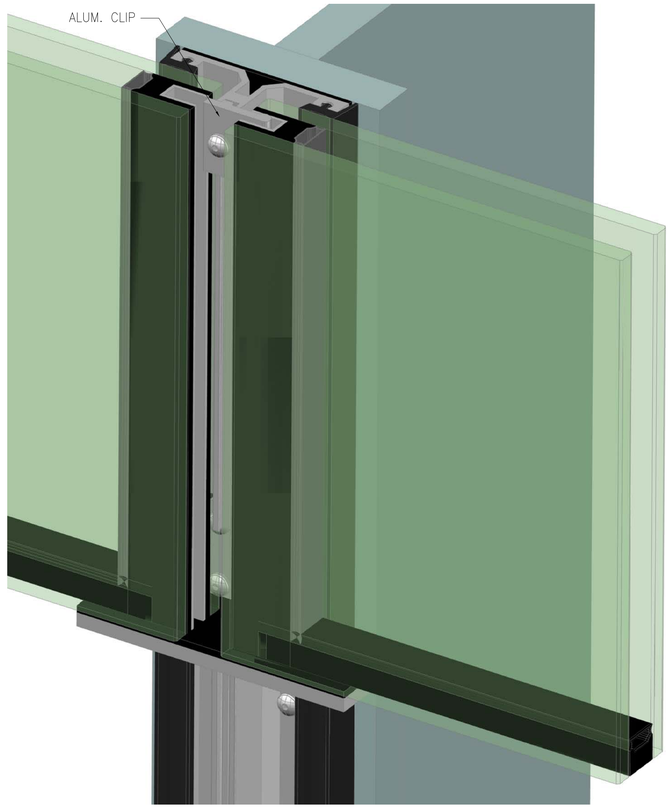

6 GLASS& CLIP DETAIL
SCALE: N/A

REV.	DESCRIPTION OR PURPOSE OF AMENDMENT	MM/DD/YY	EDIT

NAVIGATION

GLAZING CUSTOMER

ARCHITECT

Hellmuth, Obata + Kassabaum, L.P.
3200 Southwest Freeway, Suite 900
Houston, TX 77027 USA
t +1 713 407 7700 f +1 713 407 7809

STRUCTURAL ENGINEER

GENERAL CONTRACTOR

PARAGON
ARCHITECTURAL PRODUCTS

PROJECT TITLE
Schlumberger
STC Sugar Land
300 Schlumberger Dr
Sugar Land, TX 77478

DRAWING TITLE
CURTAIN WALL TYPE 2A
.
3D VIEW

SCALE	SIZE	REV.
AS SHOWN	A1	.

DRAWING STATUS
PROPOSAL

DESIGNED BY	DATE
KEAN	06/06/16
CHECKED BY	APPROVED BY
OWEN	OWEN

DRAWING NO.
601

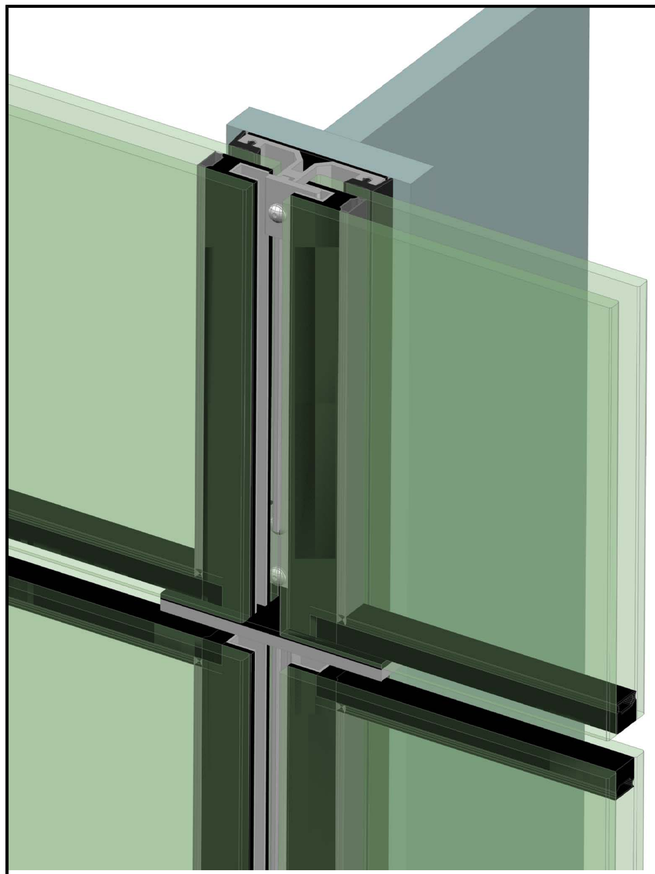

1 GLASS& CLIP DETAIL
SCALE: N/A

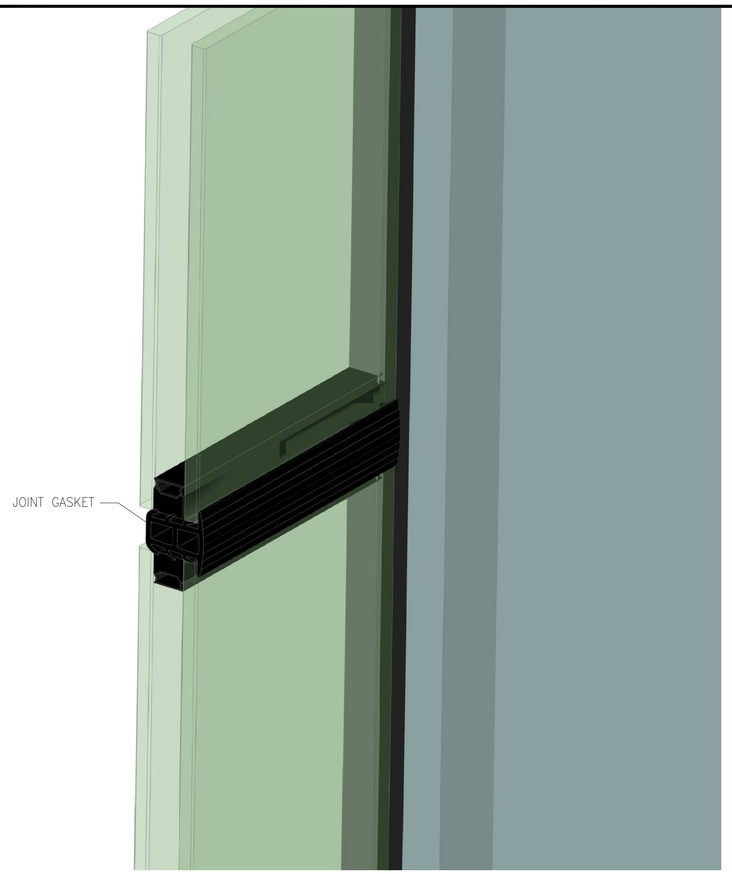

2 JOINT GASKET DETAIL
SCALE: N/A

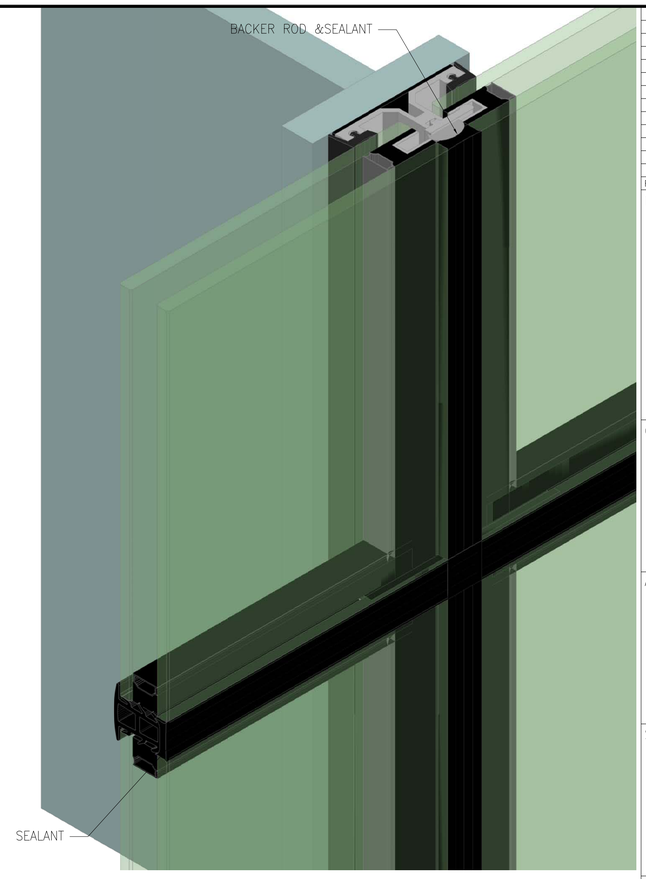

3 SEALANT DETAIL
SCALE: N/A

REV.	DESCRIPTION OR PURPOSE OF AMENDMENT	MM/DD/YY	EDIT

NAVIGATION

GLAZING CUSTOMER

ARCHITECT

Hellmuth, Obata + Kassabaum, L.P.
3200 Southwest Freeway, Suite 900
Houston, TX 77027 USA
t +1 713 407 7700 f +1 713 407 7809

STRUCTURAL ENGINEER

GENERAL CONTRACTOR

PARAGON
ARCHITECTURAL PRODUCTS

PROJECT TITLE

Schlumberger

STC Sugar Land

300 Schlumberger Dr
Sugar Land, TX 77478

DRAWING TITLE

CURTAIN WALL TYPE 2A

.

3D VIEW

SCALE	SIZE	REV.
AS SHOWN	A1	.

DRAWING STATUS
PROPOSAL

DESIGNED BY	DATE
KEAN	06/06/16

CHECKED BY	APPROVED BY
OWEN	OWEN

DRAWING NO.
602

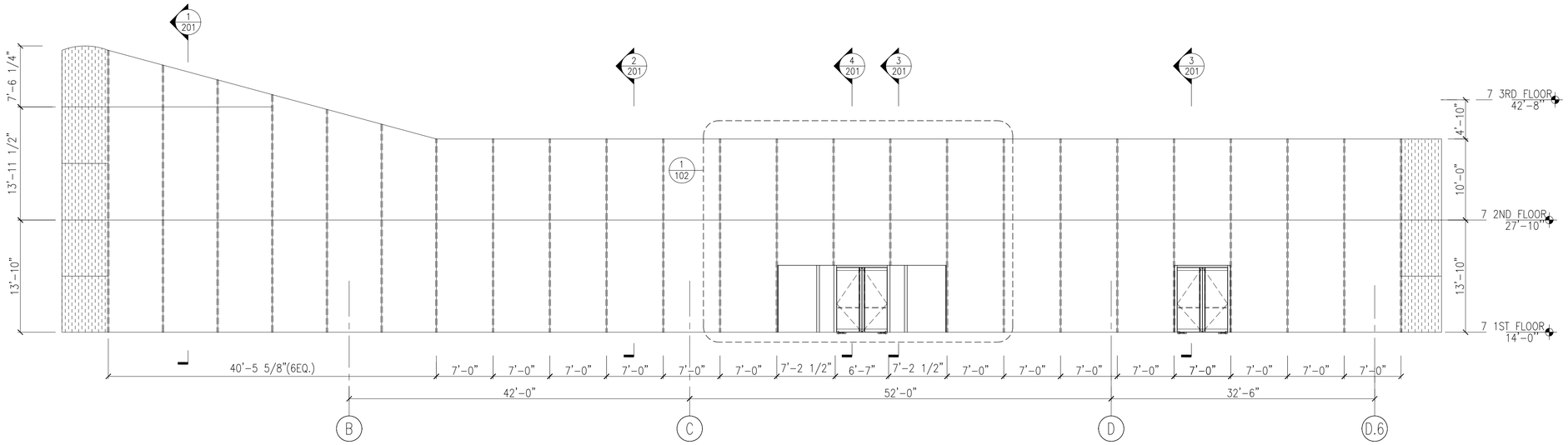

1 SITE 7 E1 ELEVATION
SCALE: 1/8"=1'-0"

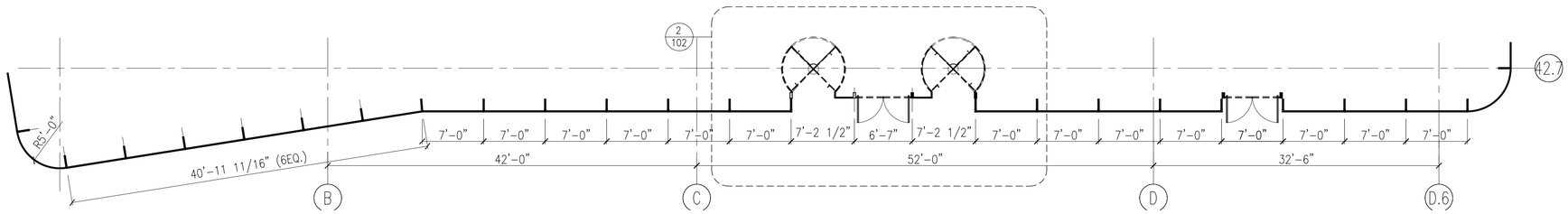

2 SITE 7 E1 PLAN
SCALE: 1/8"=1'-0"

REV.	DESCRIPTION OR PURPOSE OF AMENDMENT	MM/DD/YY	EDIT

NAVIGATION

GLAZING CUSTOMER

ARCHITECT

STRUCTURAL ENGINEER

GENERAL CONTRACTOR

PARAGON
ARCHITECTURAL PRODUCTS

PROJECT TITLE

COLUMBIA BUSINESS SCHOOL
COLUMBIA UNIVERSITY MANHATTANVILLE CAMPUS
614 WEST 131 STREET, NEW YORK, NY 10027

DRAWING TITLE
STRUCTURAL GLASS WALL
.
A-7E1 ELEVATION&PLAN

SCALE	SIZE	REV.
AS SHOWN	A1	.

DRAWING STATUS
PROPOSAL

DESIGNED BY	DATE
KEAN	06/04/17
CHECKED BY	APPROVED BY
OWEN	OWEN

DRAWING NO.
101

E:\TEDWALL PROJECT\20170527 COLUMBIA BUSINESS SCHOOL\proposal20170604.dwg

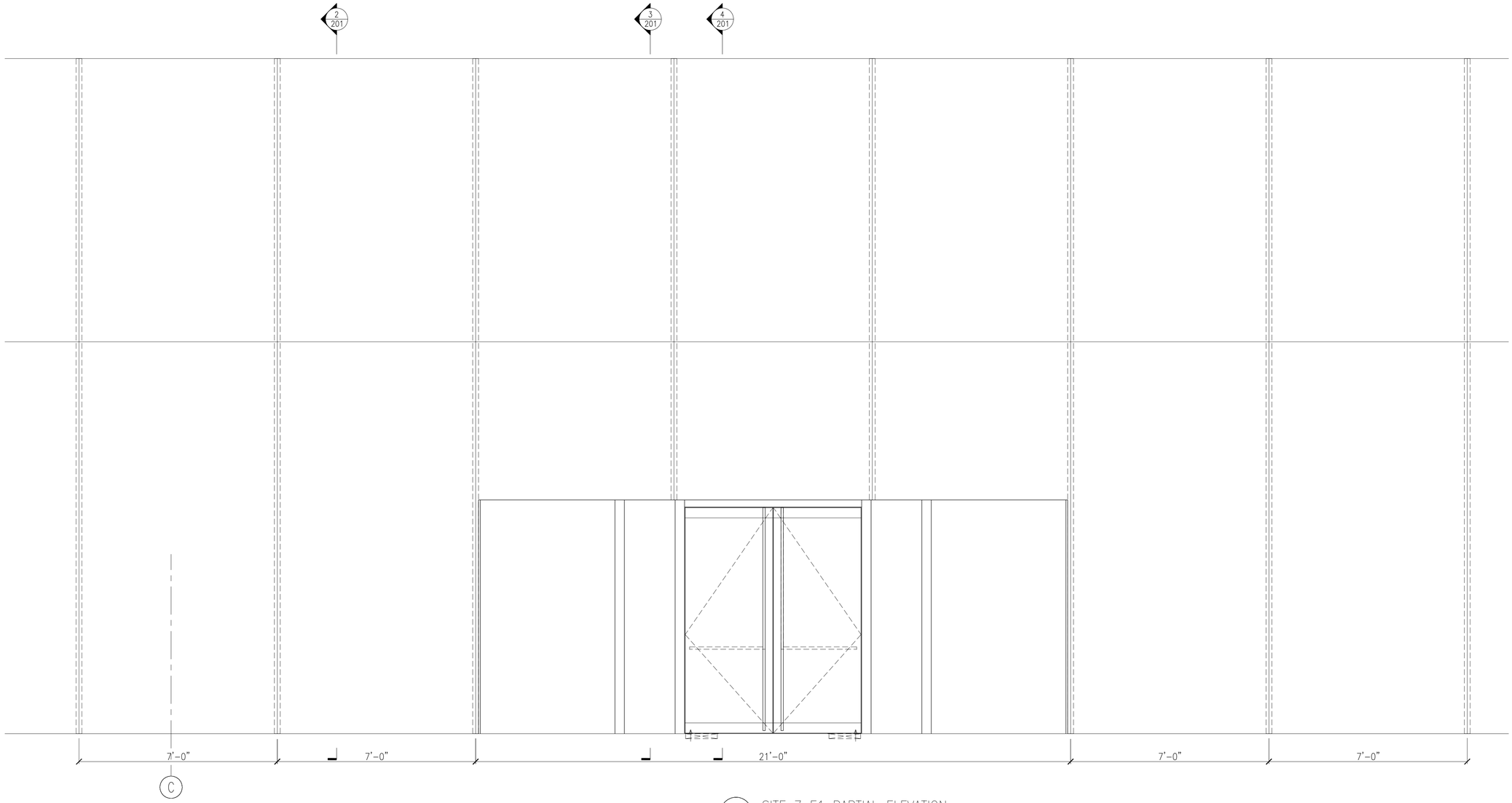

1 SITE 7 E1 PARTIAL ELEVATION
SCALE: 1/8"=1'-0"

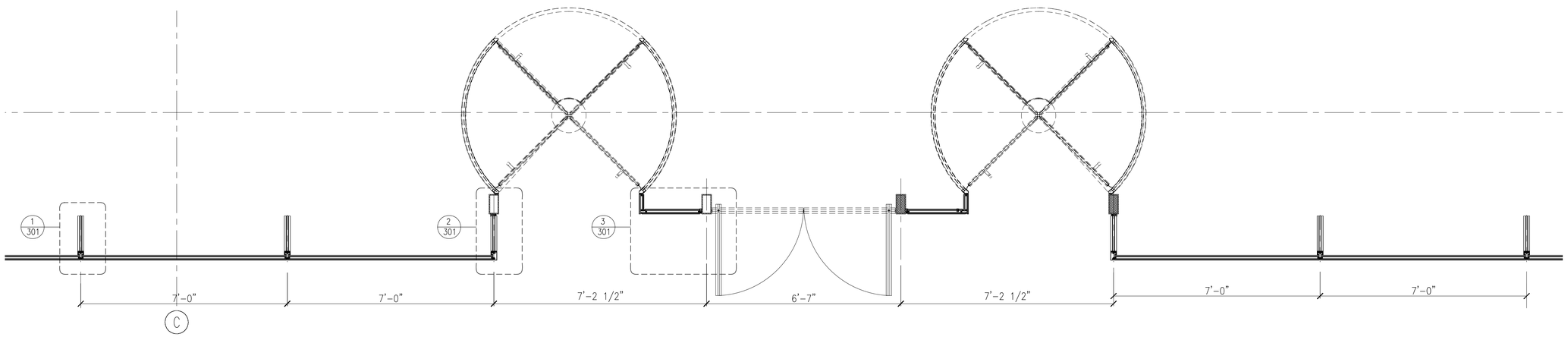

2 SITE 7 E1 PARTIAL PLAN
SCALE: 1/8"=1'-0"

REV.	DESCRIPTION OR PURPOSE OF AMENDMENT	MM/DD/YY	EDIT

NAVIGATION

GLAZING CUSTOMER

ARCHITECT

STRUCTURAL ENGINEER

GENERAL CONTRACTOR

PARAGON
ARCHITECTURAL PRODUCTS

PROJECT TITLE

COLUMBIA BUSINESS SCHOOL
COLUMBIA UNIVERSITY MANHATTANVILLE CAMPUS
614 WEST 131 STREET, NEW YORK, NY 10027

DRAWING TITLE
STRUCTURAL GLASS WALL
.
A-7E1 PARTIAL ELEVATION&PLAN

SCALE	SIZE	REV.
AS SHOWN	A1	.

DRAWING STATUS
PROPOSAL

DESIGNED BY	DATE
KEAN	06/04/17
CHECKED BY	APPROVED BY
OWEN	OWEN

DRAWING NO.
102

E:\TEDWALL PROJECT\20170527 COLUMBIA BUSINESS SCHOOL\proposal\20170604.dwg

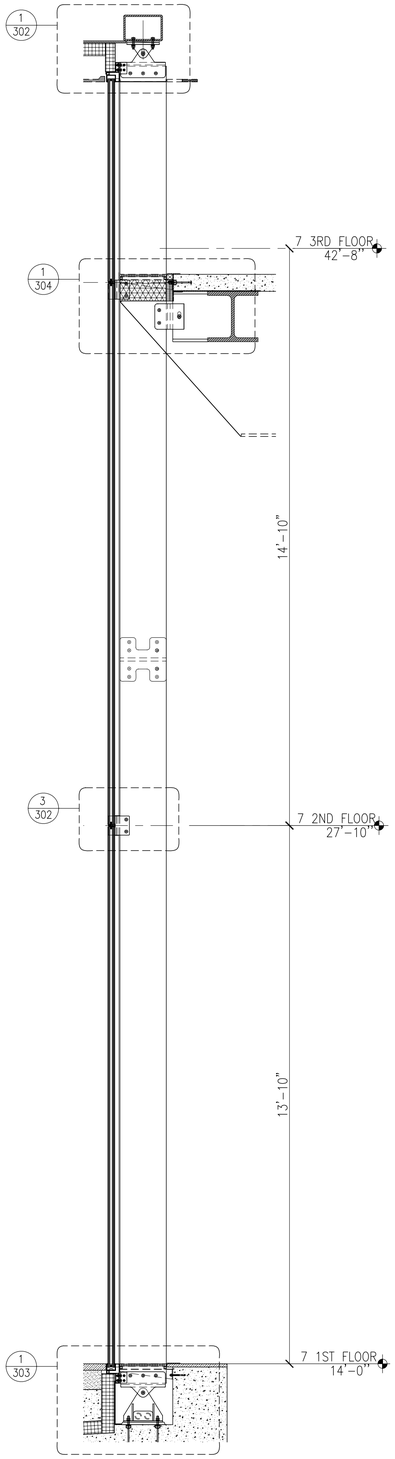

1 SECTION
SCALE: 1/2"=1'-0"

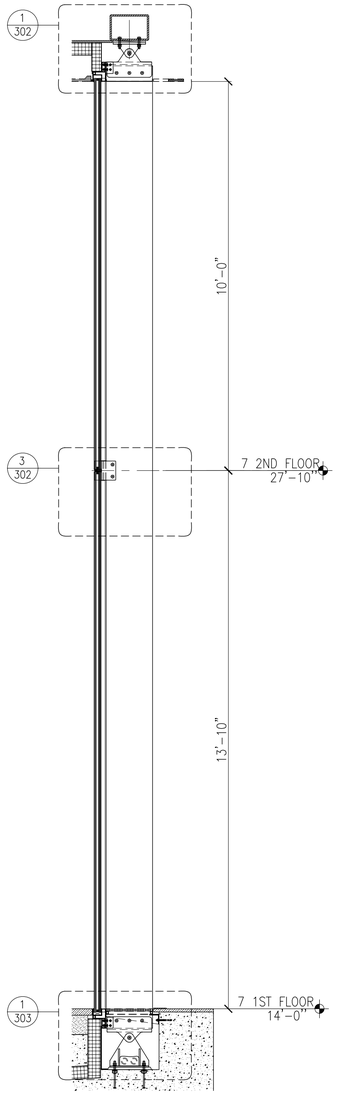

2 SECTION
SCALE: 1/2"=1'-0"

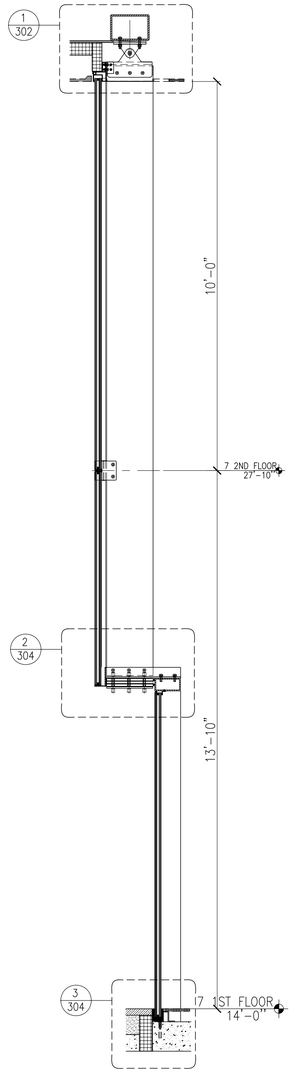

3 SECTION
SCALE: 1/2"=1'-0"

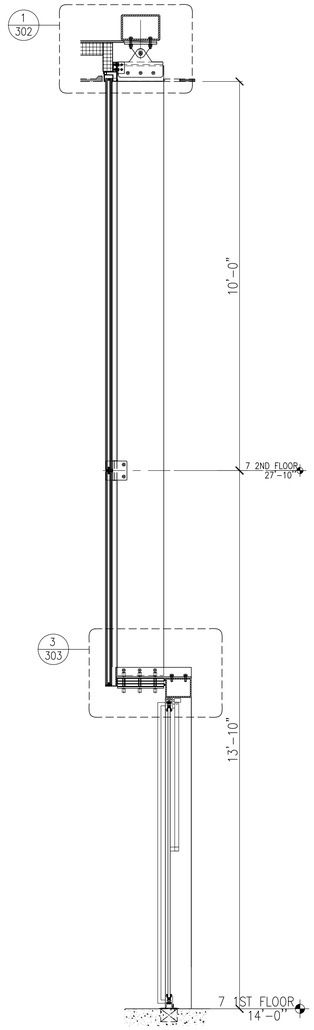

4 SECTION
SCALE: 1/2"=1'-0"

REV.	DESCRIPTION OR PURPOSE OF AMENDMENT	MM/DD/YY	EDIT

NAVIGATION

GLAZING CUSTOMER

ARCHITECT

STRUCTURAL ENGINEER

GENERAL CONTRACTOR

PARAGON
ARCHITECTURAL PRODUCTS

PROJECT TITLE

COLUMBIA BUSINESS SCHOOL
COLUMBIA UNIVERSITY MANHATTANVILLE CAMPUS
614 WEST 131 STREET, NEW YORK, NY 10027

DRAWING TITLE
STRUCTURAL GLASS WALL
.
SECTION

SCALE	SIZE	REV.
AS SHOWN	A1	.

DRAWING STATUS
PROPOSAL

DESIGNED BY	DATE
KEAN	06/04/17
CHECKED BY	APPROVED BY
OWEN	OWEN

DRAWING NO.
201

E:\TEDWALL PROJECT\20170527 COLUMBIA BUSINESS SCHOOL\proposal\20170604.dwg

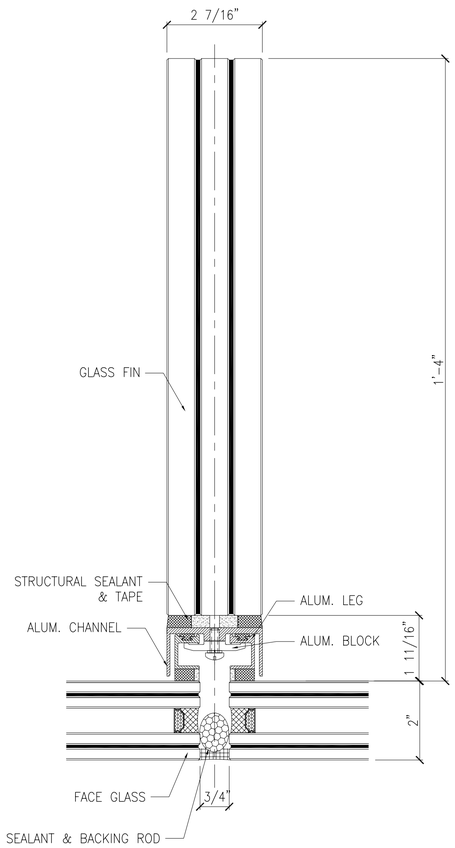

1 TYPICAL PLAN DETAIL
SCALE: 6"=1'

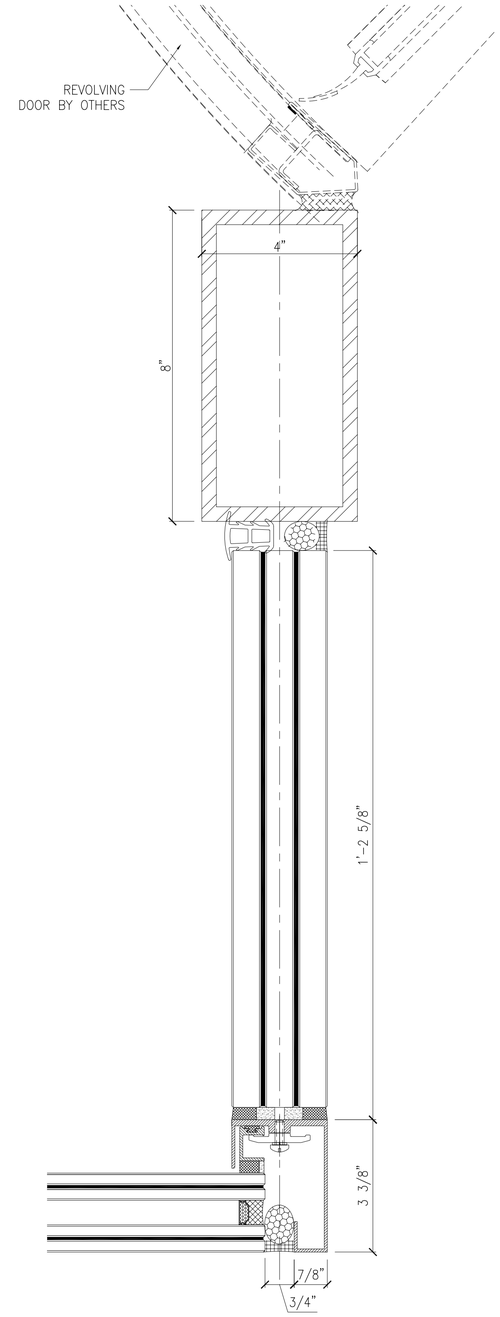

2 PLAN DETAIL @ REVOLVING DOOR
SCALE: 6"=1'

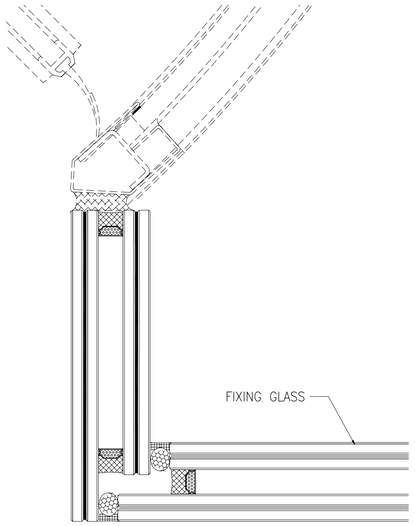

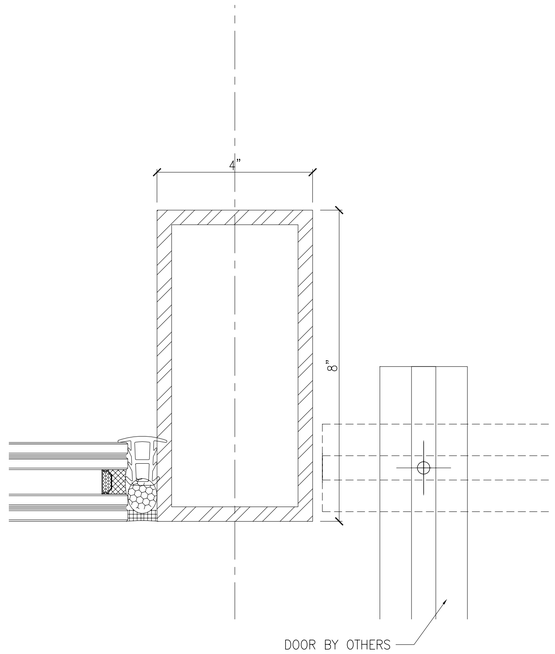

3 PLAN DETAIL @ DOOR
SCALE: 6"=1'

REV.	DESCRIPTION OR PURPOSE OF AMENDMENT	MM/DD/YY	EDIT

NAVIGATION

GLAZING CUSTOMER

ARCHITECT

STRUCTURAL ENGINEER

GENERAL CONTRACTOR

PARAGON
ARCHITECTURAL PRODUCTS

PROJECT TITLE

COLUMBIA BUSINESS SCHOOL
COLUMBIA UNIVERSITY MANHATTANVILLE CAMPUS
614 WEST 131 STREET, NEW YORK, NY 10027

DRAWING TITLE
STRUCTURAL GLASS WALL
.
TYPICAL DETAIL

SCALE	SIZE	REV.
AS SHOWN	A1	.

DRAWING STATUS
PROPOSAL

DESIGNED BY	DATE
KEAN	06/06/16
CHECKED BY	APPROVED BY
OWEN	OWEN

DRAWING NO.
301

E:\TEDWALL PROJECT\20170527 COLUMBIA BUSINESS SCHOOL\proposal\20170604.dwg

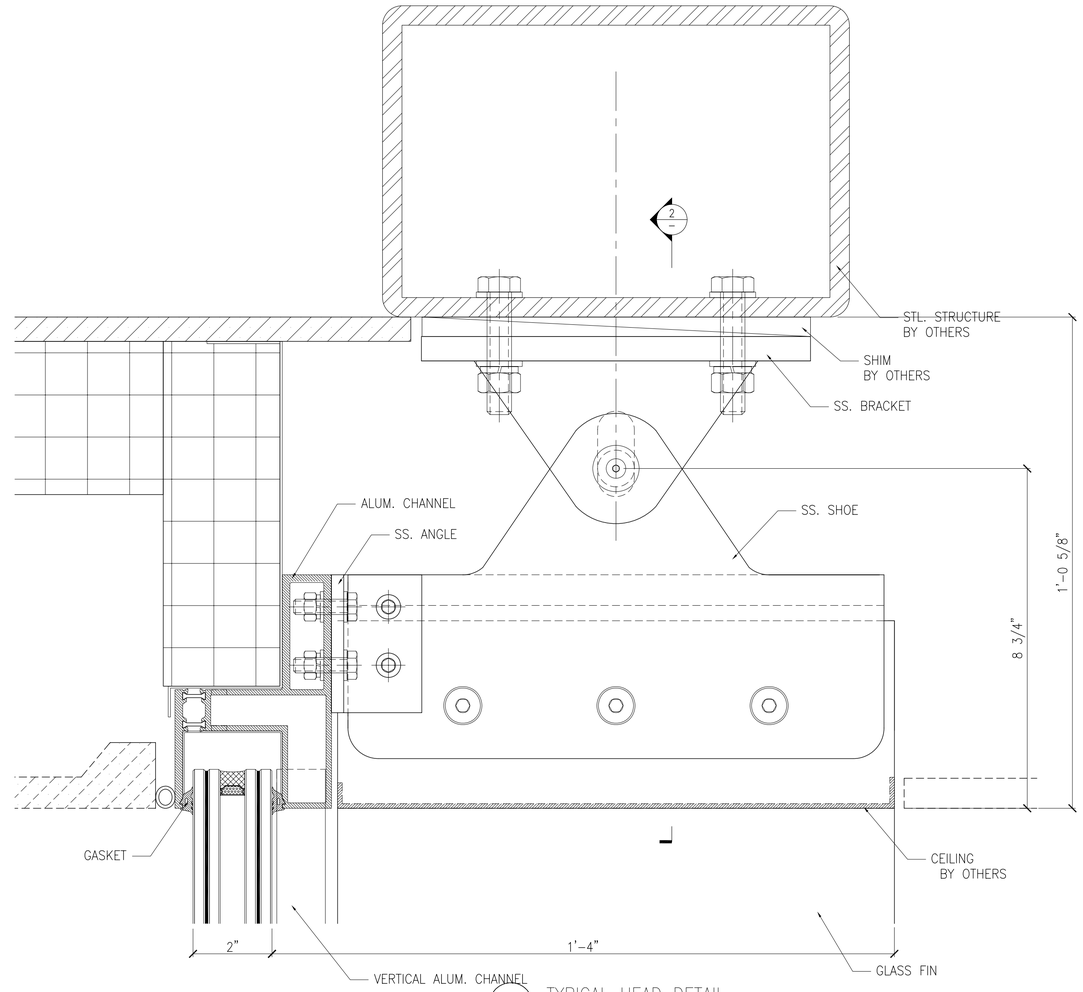

1 TYPICAL HEAD DETAIL
SCALE: 6"=1'-0"

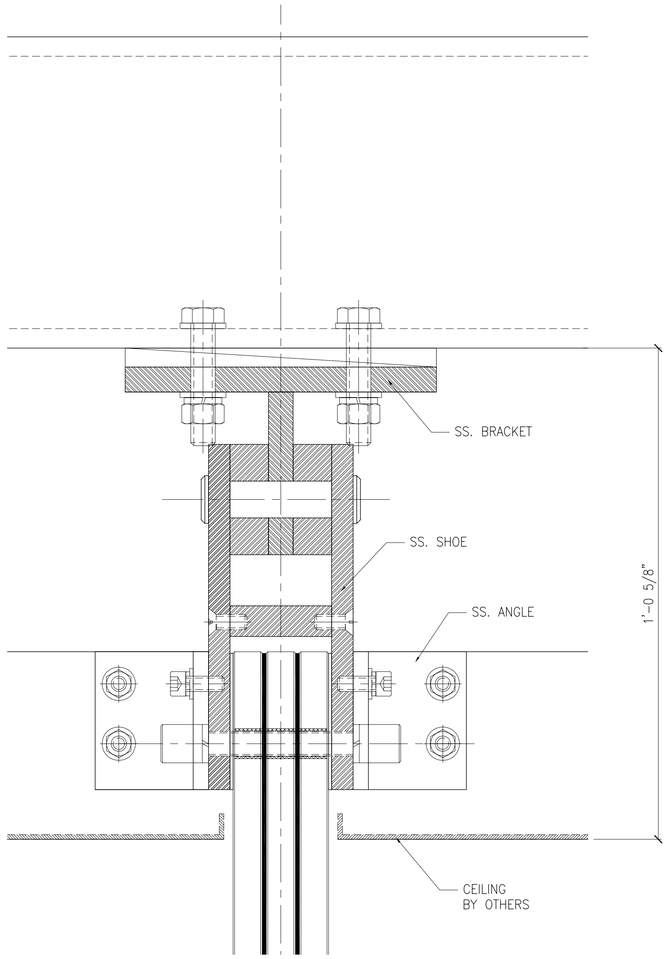

2 TYPICAL FIN HEAD DETAIL
SCALE: 6"=1'-0"

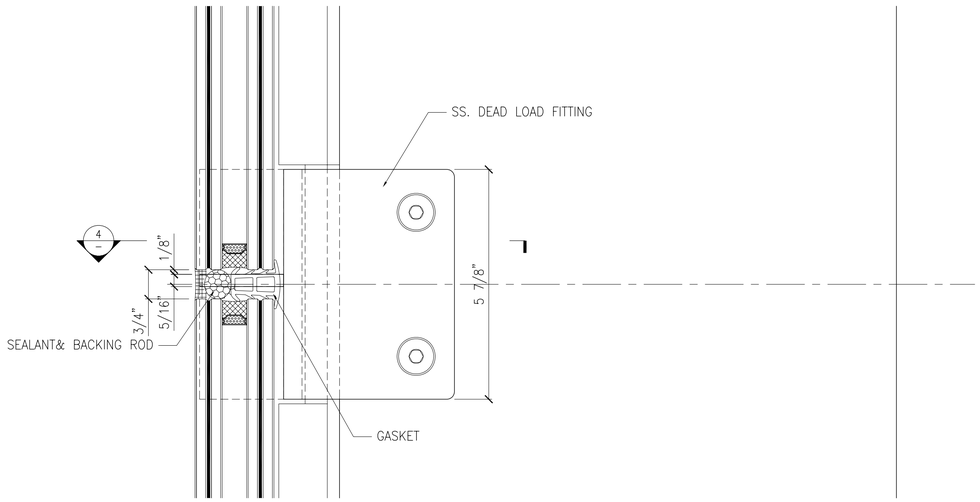

3 TYPICAL SECTION DETAIL
SCALE: 6"=1'-0"

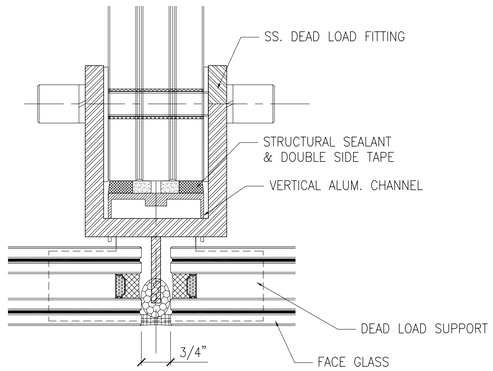

4 TYPICAL FIN HEAD DETAIL
SCALE: 6"=1'-0"

REV.	DESCRIPTION OR PURPOSE OF AMENDMENT	MM/DD/YY	EDIT

NAVIGATION

GLAZING CUSTOMER

ARCHITECT

STRUCTURAL ENGINEER

GENERAL CONTRACTOR

PARAGON
ARCHITECTURAL PRODUCTS

PROJECT TITLE

COLUMBIA BUSINESS SCHOOL
COLUMBIA UNIVERSITY MANHATTANVILLE CAMPUS
614 WEST 131 STREET, NEW YORK, NY 10027

DRAWING TITLE
STRUCTURAL GLASS WALL
.
TYPICAL DETAIL

SCALE	SIZE	REV.
AS SHOWN	A1	.

DRAWING STATUS
PROPOSAL

DESIGNED BY	DATE
KEAN	06/06/16

CHECKED BY	APPROVED BY
OWEN	OWEN

DRAWING NO.
302

E:\TEDWALL PROJECT\20170527 COLUMBIA BUSINESS SCHOOL\proposal20170604.dwg

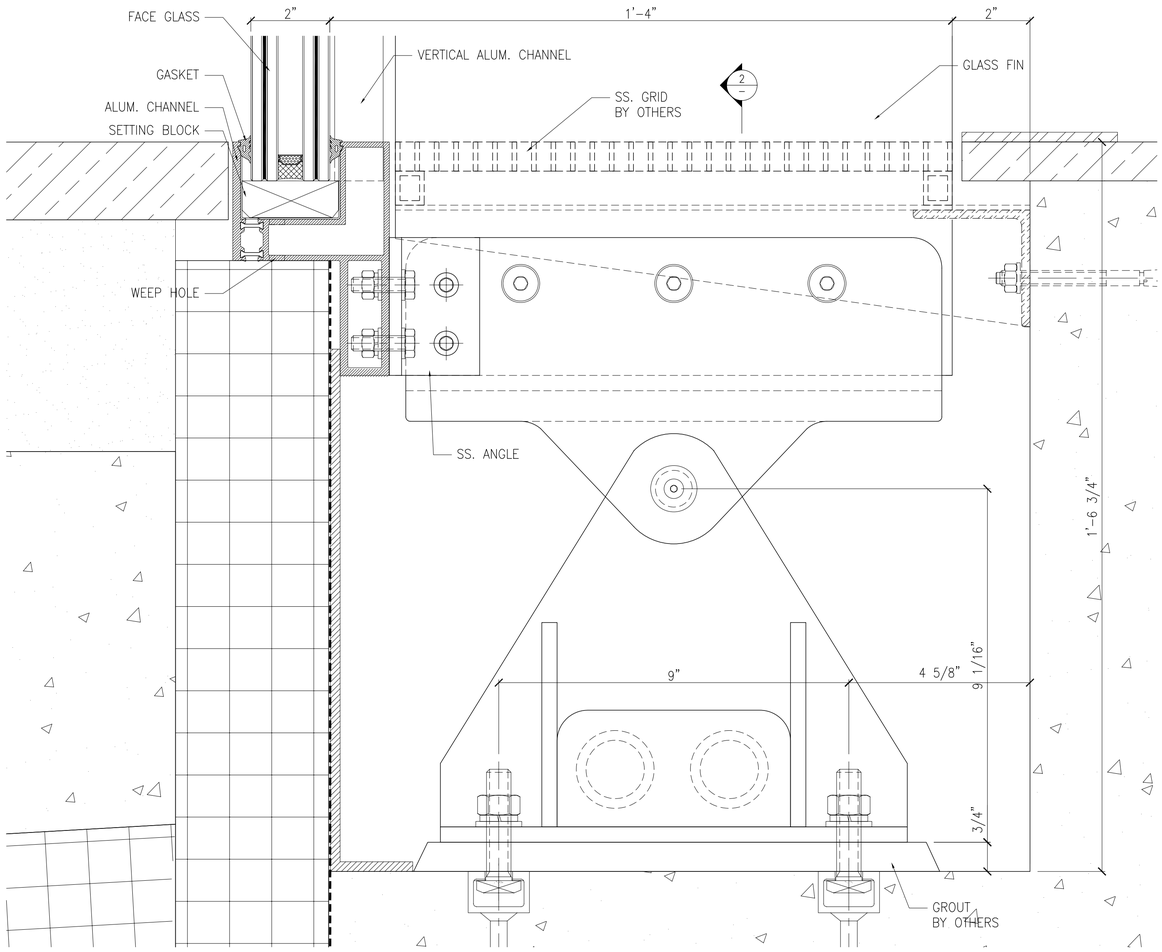

1 TYPICAL SILL DETAIL
SCALE: 6"=1'-0"

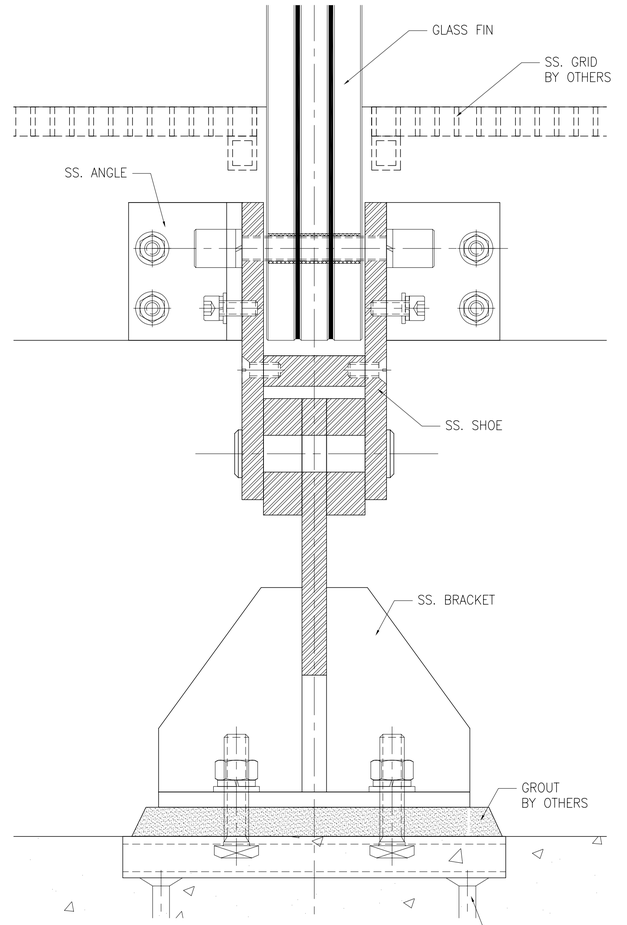

2 TYPICAL FIN SILL DETAIL
SCALE: 6"=1'-0"

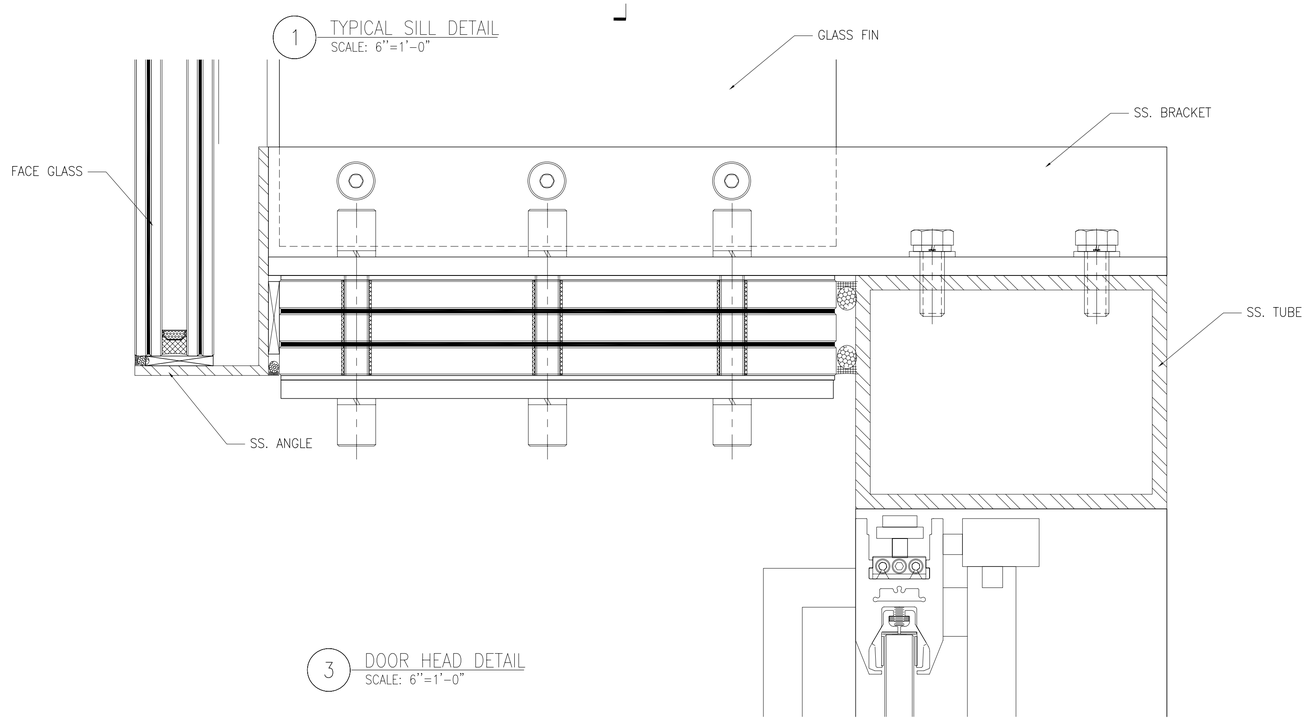

3 DOOR HEAD DETAIL
SCALE: 6"=1'-0"

REV.	DESCRIPTION OR PURPOSE OF AMENDMENT	MM/DD/YY	EDIT

NAVIGATION

GLAZING CUSTOMER

ARCHITECT

STRUCTURAL ENGINEER

GENERAL CONTRACTOR

PARAGON
ARCHITECTURAL PRODUCTS

PROJECT TITLE

COLUMBIA BUSINESS SCHOOL
COLUMBIA UNIVERSITY MANHATTANVILLE CAMPUS
614 WEST 131 STREET, NEW YORK, NY 10027

DRAWING TITLE
STRUCTURAL GLASS WALL
.
TYPICAL DETAIL

SCALE	SIZE	REV.
AS SHOWN	A1	.

DRAWING STATUS
PROPOSAL

DESIGNED BY	DATE
KEAN	06/06/16
CHECKED BY	APPROVED BY
OWEN	OWEN

DRAWING NO.
303

E:\TEDWALL PROJECT\20170527 COLUMBIA BUSINESS SCHOOL\proposal\20170604.dwg

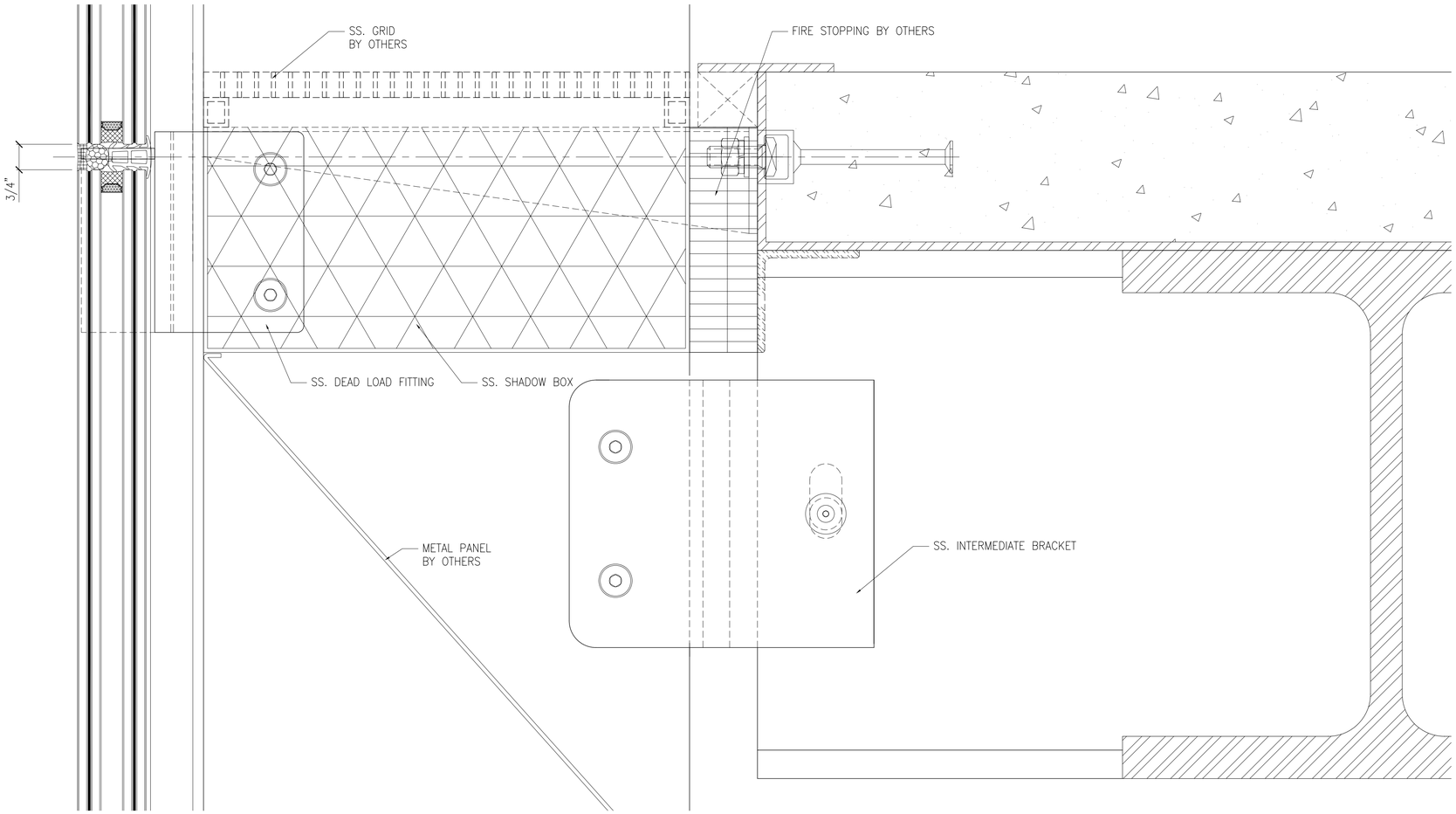

1 SECTION DETAIL@SLAB OF 3RD FLOOR
SCALE: 6"=1'-0"

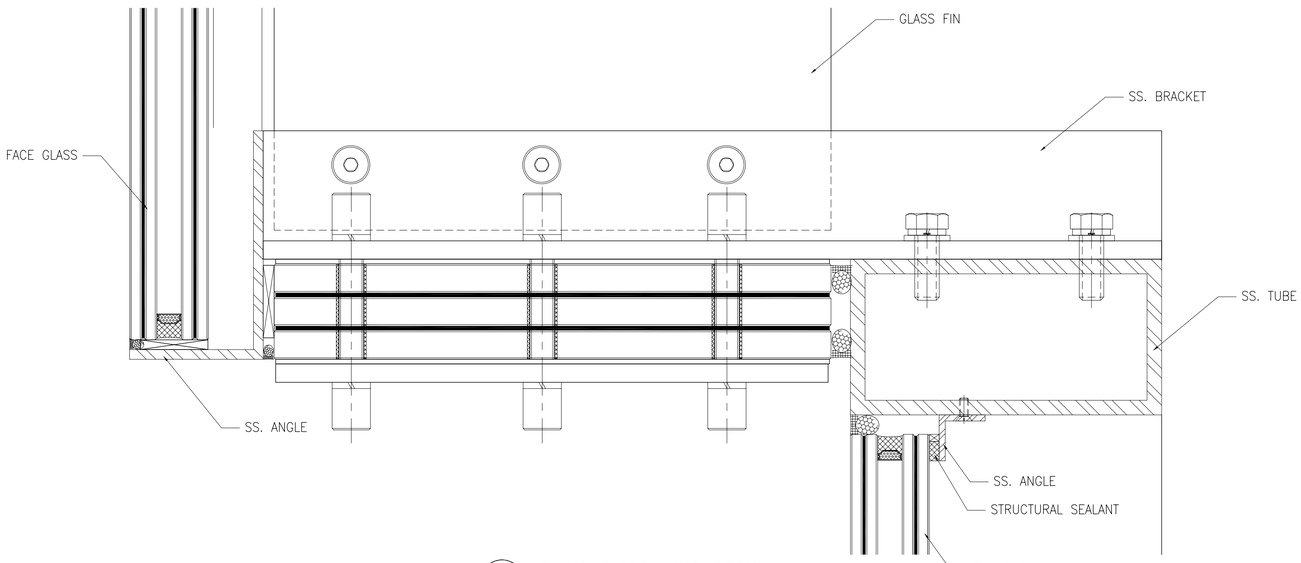

2 FIXING GLASS HEAD DETAIL
SCALE: 6"=1'-0"

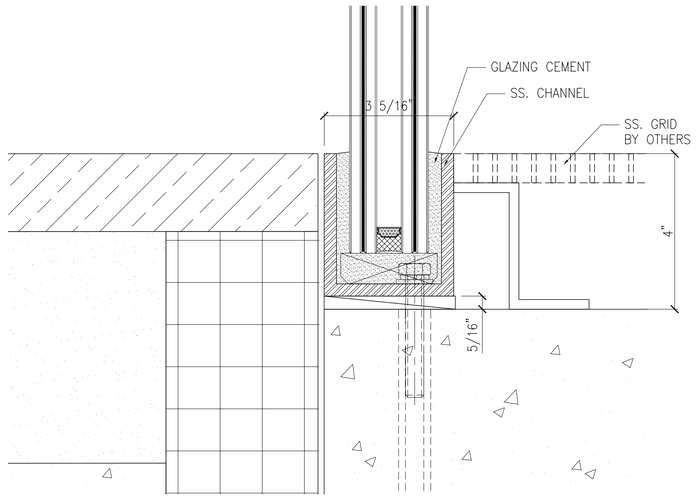

3 FIXING GLASS SILL DETAIL
SCALE: 6"=1'-0"

REV.	DESCRIPTION OR PURPOSE OF AMENDMENT	MM/DD/YY	EDIT

NAVIGATION

GLAZING CUSTOMER

ARCHITECT

STRUCTURAL ENGINEER

GENERAL CONTRACTOR

PARAGON
ARCHITECTURAL PRODUCTS

PROJECT TITLE

COLUMBIA BUSINESS SCHOOL
COLUMBIA UNIVERSITY MANHATTANVILLE CAMPUS
614 WEST 131 STREET, NEW YORK, NY 10027

DRAWING TITLE
STRUCTURAL GLASS WALL
.
TYPICAL DETAIL

SCALE	SIZE	REV.
AS SHOWN	A1	.

DRAWING STATUS
PROPOSAL

DESIGNED BY	DATE
KEAN	06/06/16
CHECKED BY	APPROVED BY
OWEN	OWEN

DRAWING NO.
304

E:\TEDWALL PROJECT\20170527 COLUMBIA BUSINESS SCHOOL\proposal\20170604.dwg

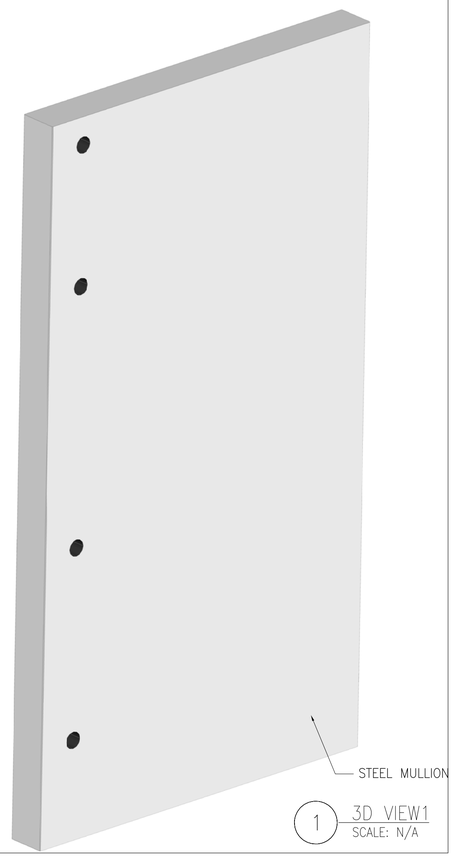

1 3D VIEW1
SCALE: N/A

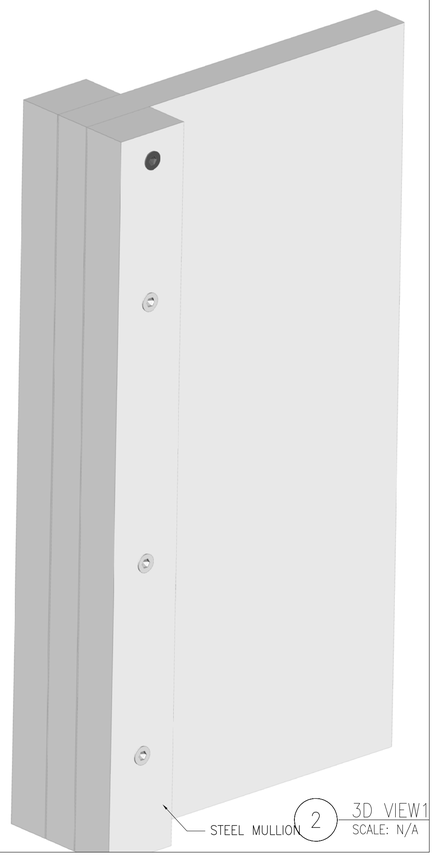

2 3D VIEW1
SCALE: N/A

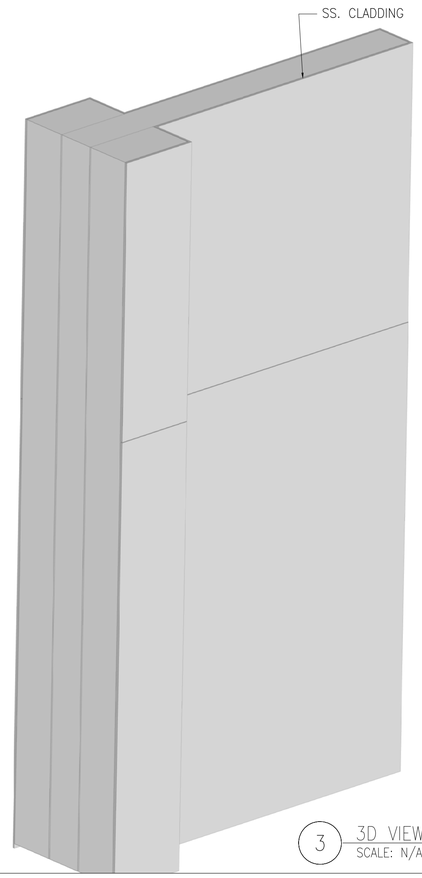

3 3D VIEW1
SCALE: N/A

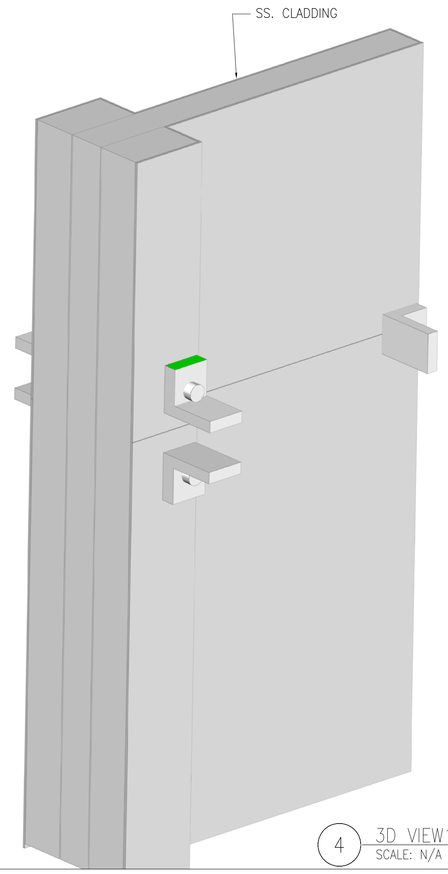

4 3D VIEW1
SCALE: N/A

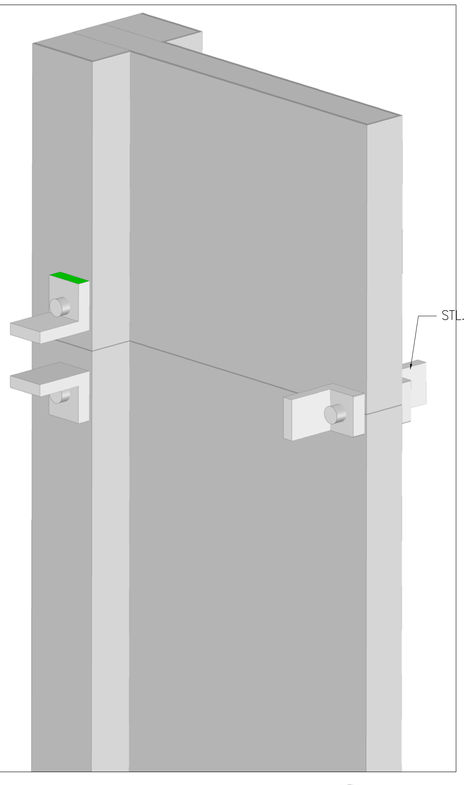

5 3D VIEW1
SCALE: N/A

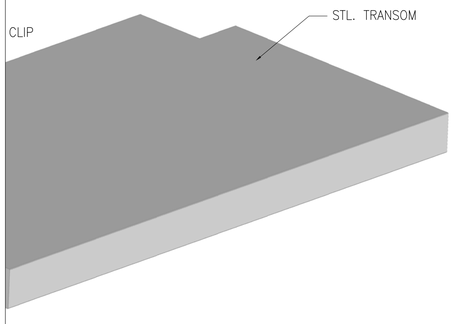

6 3D VIEW1
SCALE: N/A

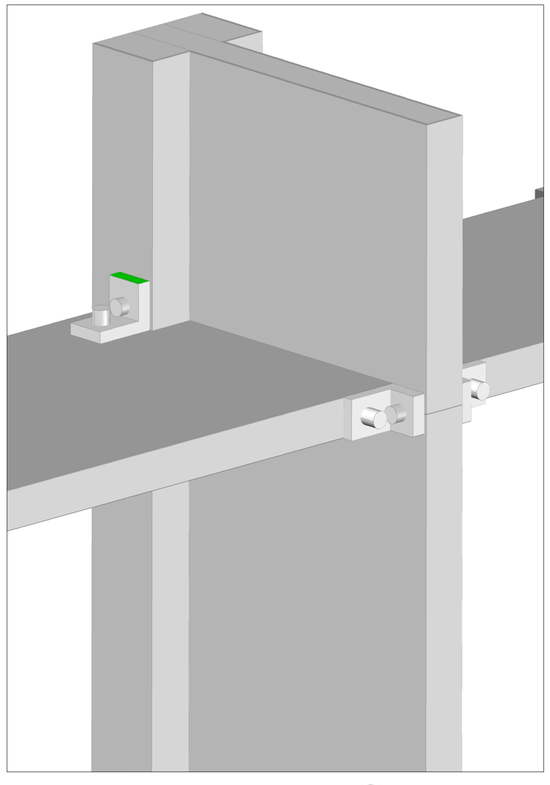

7 3D VIEW1
SCALE: N/A

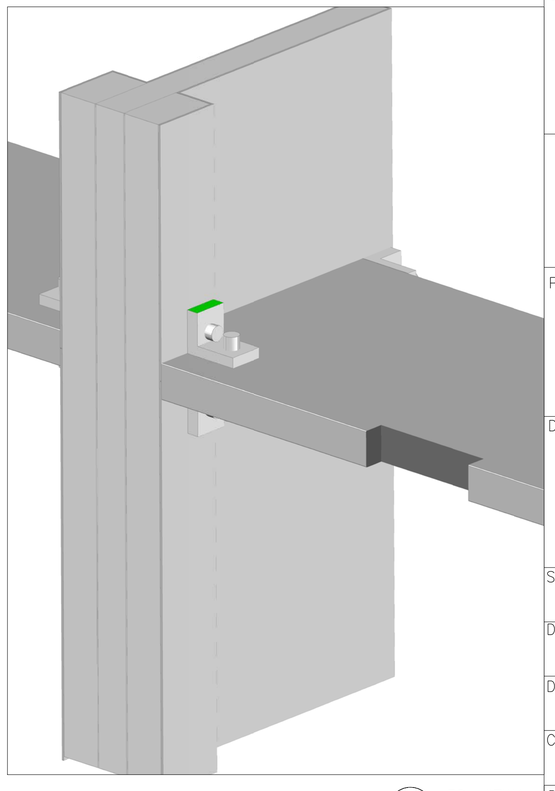

8 3D VIEW1
SCALE: N/A

REV.	DESCRIPTION OR PURPOSE OF AMENDMENT	MM/DD/YY	EDIT

NAVIGATION

GENERAL CONTRACTOR

ARCHITECT

STRUCTURAL ENGINEER

GLAZING CONTRACTOR

PARAGON

PROJECT TITLE

DRAWING TITLE
STRUCTURAL GLASS WALL

SCALE	SIZE	REV.
N/A	A1	.

DRAWING STATUS
PROPOSAL DRAWING

DESIGNED BY	DATE
KEAN	10/16/2014
CHECKED BY	APPROVED BY
OWEN	OWEN

DRAWING NO.
101

E:\tender\PRESIDENTIAL PLAZA_PROPOSAL_R0_20141211.dwg

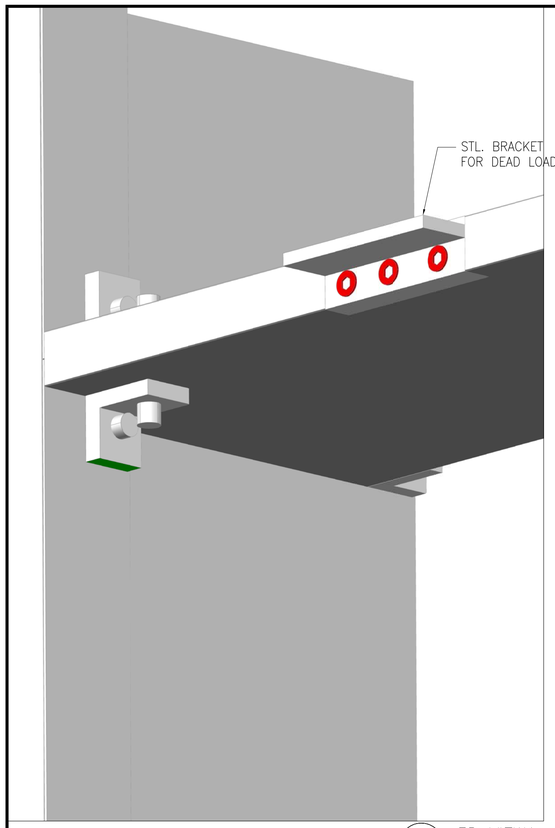

9 3D VIEW1
SCALE: N/A

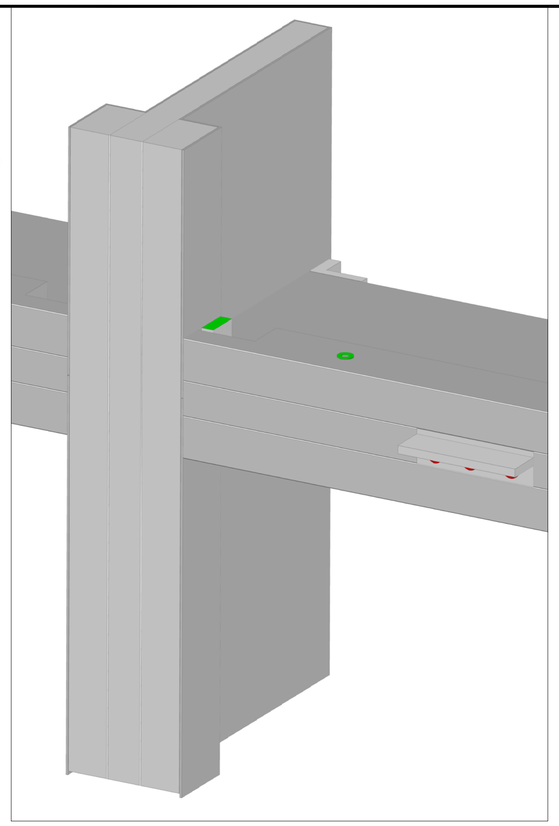

10 3D VIEW1
SCALE: N/A

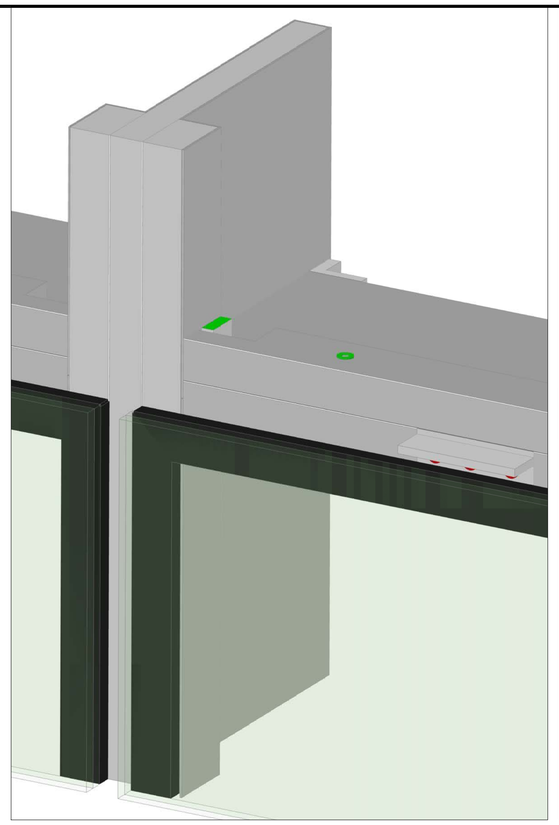

11 3D VIEW1
SCALE: N/A

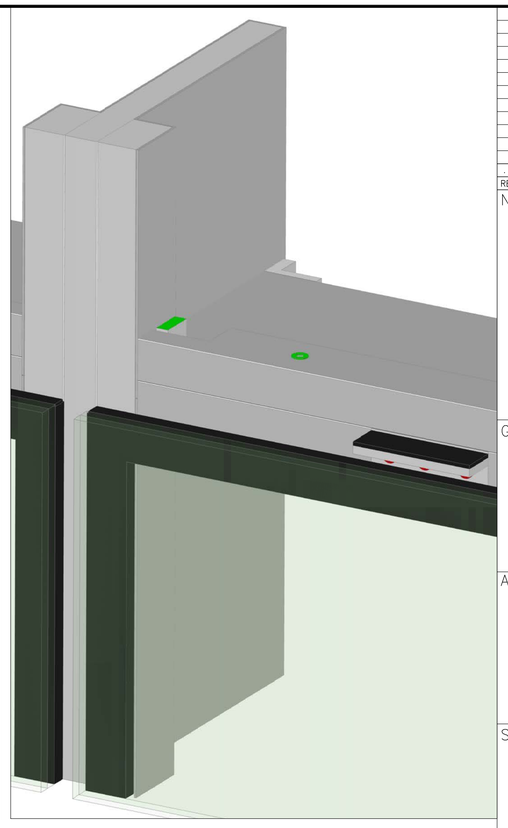

12 3D VIEW1
SCALE: N/A

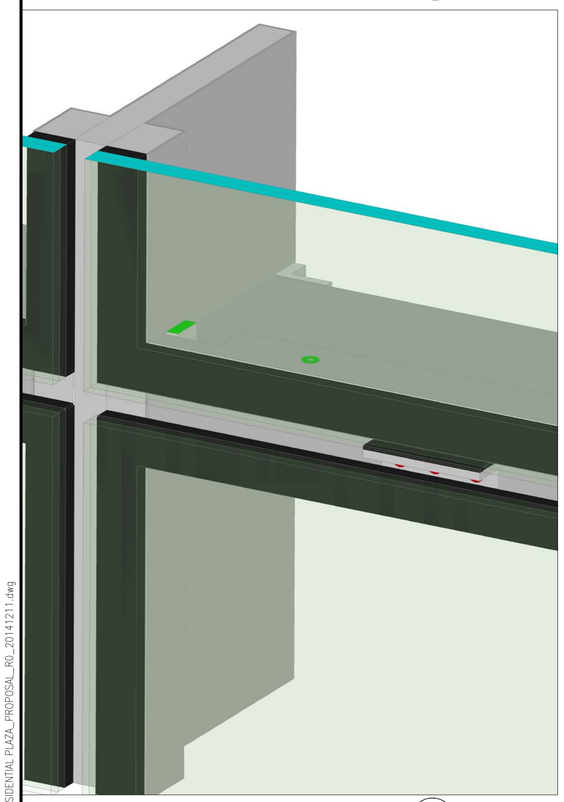

13 3D VIEW1
SCALE: N/A

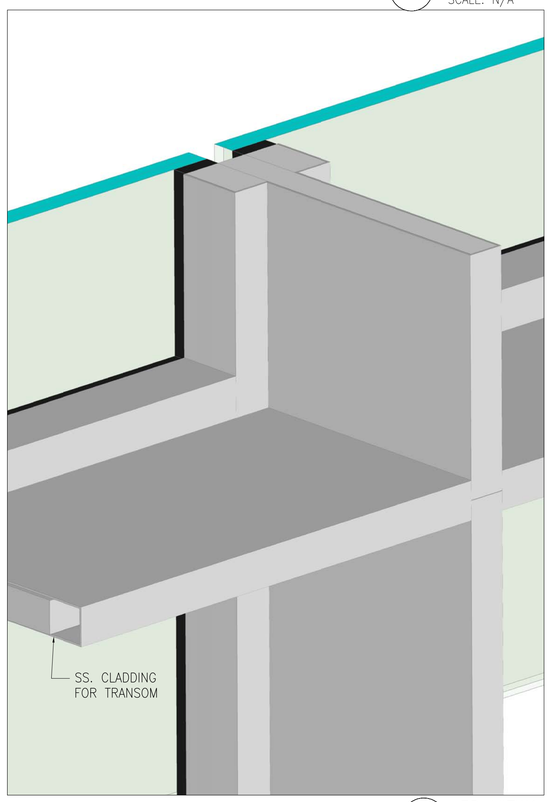

14 3D VIEW1
SCALE: N/A

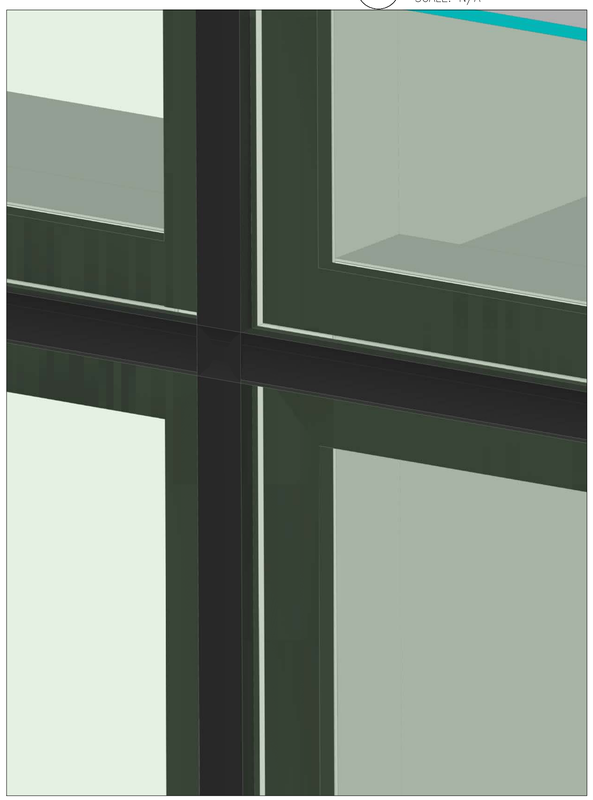

15 3D VIEW1
SCALE: N/A

REV.	DESCRIPTION OR PURPOSE OF AMENDMENT	MM/DD/YY	EDIT

NAVIGATION

GENERAL CONTRACTOR

ARCHITECT

STRUCTURAL ENGINEER

GLAZING CONTRACTOR

PARAGON

PROJECT TITLE

DRAWING TITLE
STRUCTURAL GLASS CANOPY

SCALE	SIZE	REV.
N/A	A1	.

DRAWING STATUS
PROPOSAL DRAWING

DESIGNED BY	DATE
KEAN	10/16/2014
CHECKED BY	APPROVED BY
OWEN	OWEN

DRAWING NO.
102

E:\tender\PRESIDENTIAL PLAZA_PROPOSAL_R0_20141211.dwg